CARGO TARPS®

PROFESSIONAL GRADE
TARP SYSTEMS

421 MECHANIZED TWIN GEARBOX SYSTEM

P/N: **421GIC01EN-R2**
Updated: January 2018

COMPLETE INSTALLATION GUIDE 421

System Installation, Usage and Maintenance

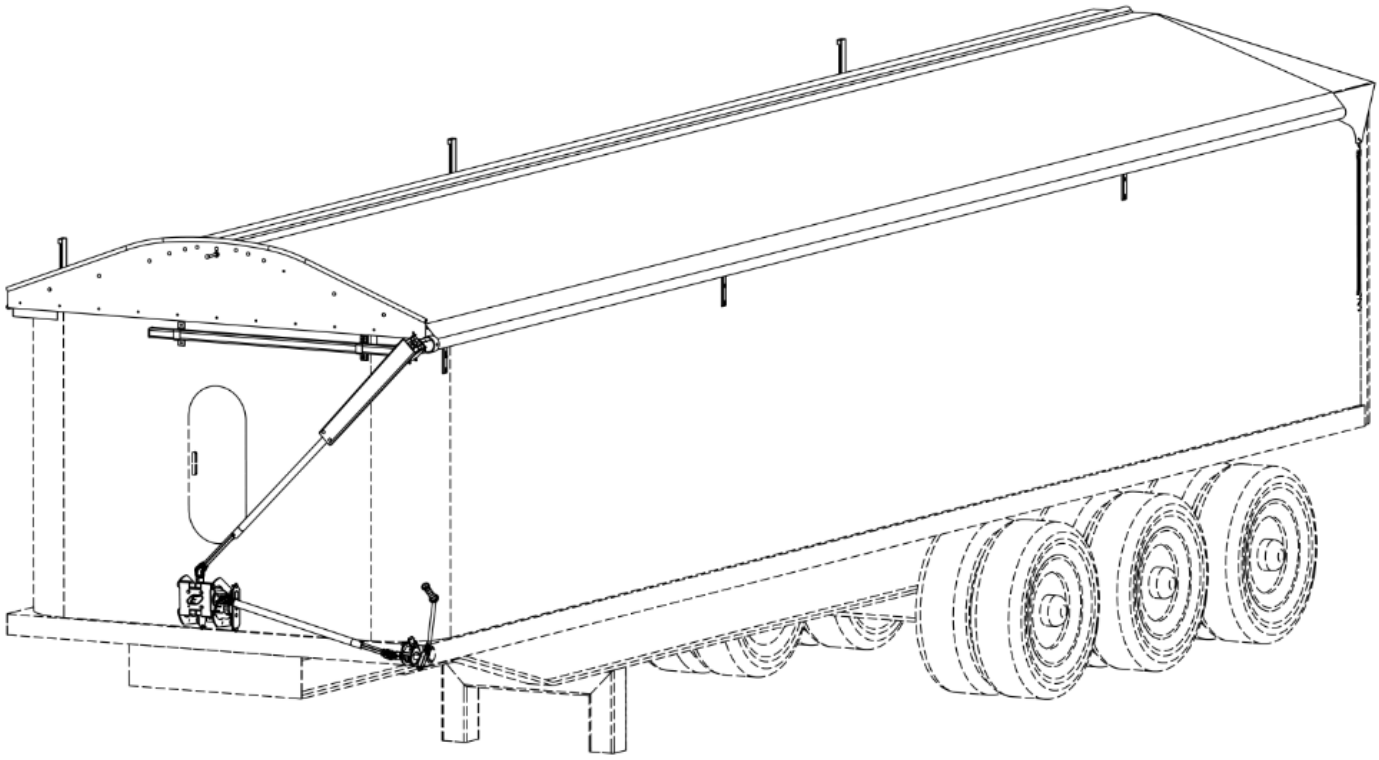

Notice to Distributors: *Provide this guide to Clients upon product delivery.*

Table of contents

Safety Information 4
Warranty details 2
General Information 3
Step 1. Front corners 4
Step 2. Front cap 6
2a. Front cap preparation. 6
2b. Cap installation 7
Step 3. Cross-bows 10
3a. Cross-bow pivots and saddles 10
3b. Aluminum upper rail 12
3c. Wood beam as the upper rail 14
3d. Installation of the rear cross-bow 16
Step 4. Back tarp (Back flap) 19
Step 5. Anchor block and grab block 21
Step 6. Main Tarp 24
6a. Tarp assembly 24
6b Installation of the tarp 26
Step 7. Operating mechanism 28
7a. Installation of the central mechanism 29
7b. Installation of the complete assembled crank 31
7c. Installation of the Superior Telescopic Tube 33
Step 8. Tensioners 36
Step 9. Final adjustments 40
9a. Central cross-bows 40
9b. Central pipe 41
9c Pull Crank 42
9d. Installation of the logos/stickers/decals 43
Step 10. Final inspection 43
System usage 44
System Maintenance 45
Replacing cables and springs 46
External tensioner. 46
Internal Tensioner 49
Replacement parts 51
Central Mechanism 51
Assembled crank GEN 1 52
Assembled crank GEN 2 53
Superior Telescopic Tube GEN 1 54
Superior Telescopic Tube GEN 2 55
Interior Telescopic Tube 56
Internal Tensioner B2 57
External tensioner 60'' 58
Appendix 59
Drilling template 59
FINAL INSPECTION FORM 60

Safety Information

Comments description

WARNING
WARNING indicates a dangerous situation which, if not avoided, could induce severe injuries and even death.
NOTICE
NOTICE presents information considered important, even though not related to safety hazards (For example, information about material damage).
NOTE
NOTE contains essential information about the product installation, operation and Warranty Policy.
Advice
Advice contains information to facilitate the installation process, while not affecting the product operation.

General Safety Information

WARNING
• Read this manual before installing and operating this product. • Read all safety information before installing and using this product. • Make sure your work platform, scaffolds and/or ladders are secured. • Always wear safety goggles during the installation and use of this product. • Always keep your clothing away from moving parts. • Do not operate the system under low height power lines. • Never operate the system on a moving trailer or vehicle.

Warranty details

The warranty will be available shortly. Please contact your distributor or E- Cargo Tarps for more details.

General Information

List of tools and equipment required during installation

1. Scissor Lift / Scaffold
2. Welder (Aluminum)
3. Welder (Steel)
4. Plasma cutter machine
5. Buffer with cutting and sanding discs
6. Cordless drill
7. Drill bit set (7/32),(17/64),(21/64)
8. Anti-Seize
9. Imperial wrench set
10. Vise-Grip pliers
11. Imperial Socket set with 3/8'' drive
12. Rubber mallet
13. Silicone gun
14. Measuring tape 25ft
15. Permanent marker
16. Square

Rust prevention

In order to prevent rust, paint all unfinished steel surfaces, such as welds, ground surfaces, or any components cut during installation. Use only corrosion resistant paint. Paint is not provided with the system.

General advice

Example

- This advice applies to all types of parts that need to be screwed on a trailer.
- This advice allows for a faster and improved product installation.

1) Position the part and drill the first hole.

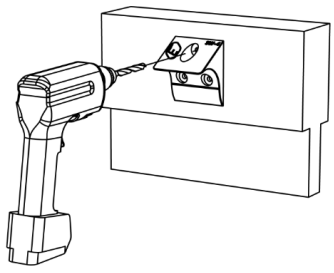

2) Install a screw

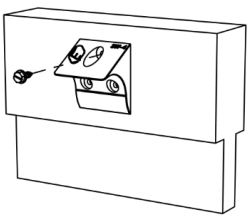

3) Drill remaining holes

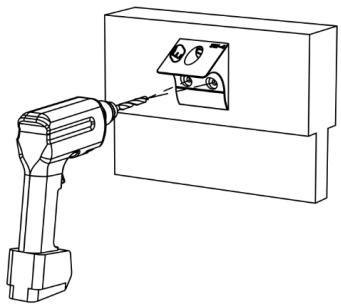

4) Install remaining screws

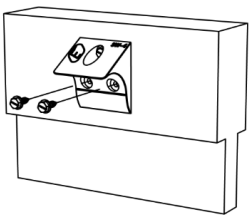

Step 1. Front corners

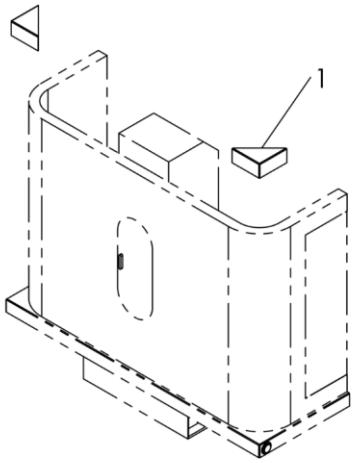

Item	Part #	Description
1	101CM1053-6	CORRECTOR CORNER 6"X6"
	101CM1053-8	CORRECTOR CORNER 8"X10"
	101CM1053-10	CORRECTOR CORNER 10"X14"
	101SA1021-12	CORRECTOR CORNER 12"X12"
	101SA1021-14	CORRECTOR CORNER 14" X 14"
	101SA1021-18	CORRECTOR CORNER 18"X18"
	101SA1021-22/25	CORRECTOR CORNER 22 3/4 X 25 1/4
	101SA1021-24	CORRECTOR CORNER 24" X 24"

NOTE

- The installation of corrector corners is not always necessary. The figure below shows the types of trailer front options requiring the installation of corners.

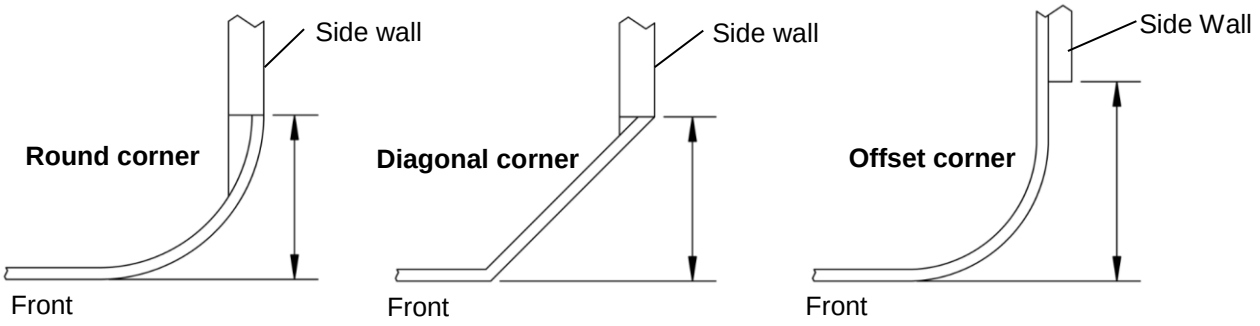

- When corners are required, they are provided with the system.
- Some trailer fronts require minor modifications to allow the mounting of the corners.

1. **Figure 1.** Take the necessary measurements at the front corners of the trailer. Make sure to consider the corner thickness as shown.
2. **Figure 2.** Cut the provided corners as per the measurements.

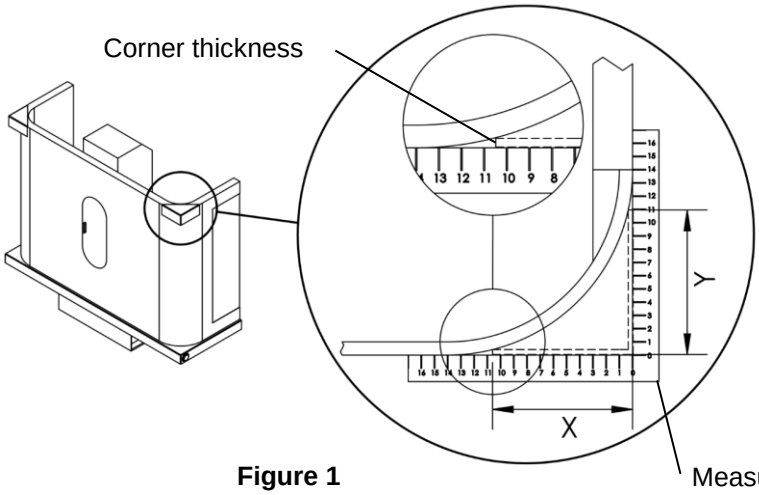

Figure 1

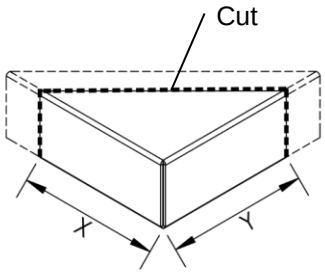

Figure 2

3. **Figure 3.** Position the corners on the trailer. Make sure they are aligned with both the side and front walls.
4. **Figure 4.** Weld firmly to the trailer.

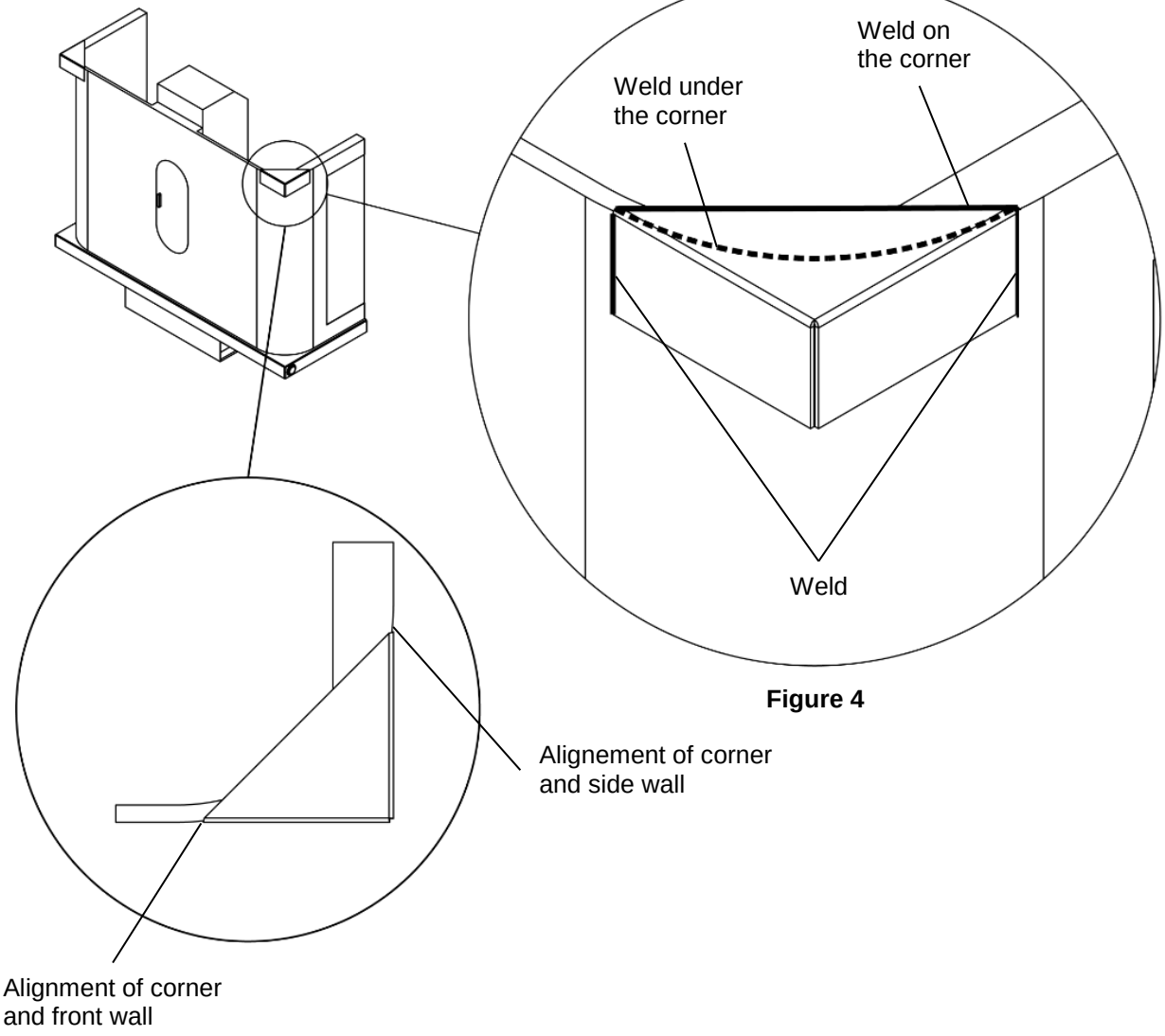

Figure 4

Figure 3

Step 2. Front cap

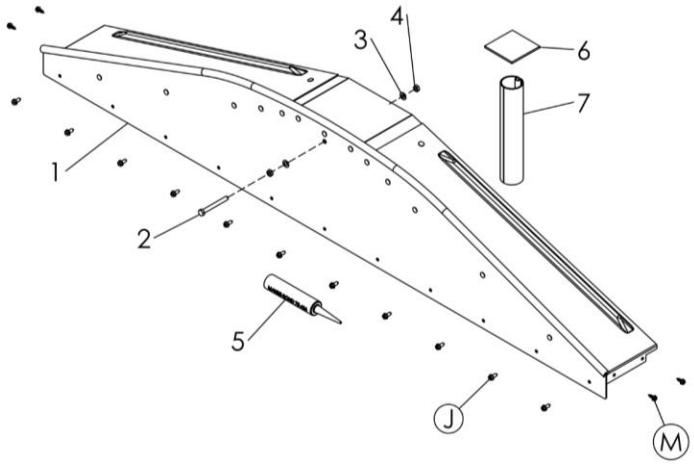

Item	Part #	Description
1	101SA0002-(10B/12B/14B/16B)	BOLTED ALUMINUM FRONT CAP (10"/12''/14''/16'') HIGH
2	151-01PZ0114	1/2-13 X 4,5" LG ZP HEX BOLT
3	151-02PZ0008	1/2" STD ZP WASHER
4	151-04PZ0008	1/2-13 ZP STD NUT
5	151CA2071	MANUS-BOND 75-AM GREY
6	101CM0004-5	ALUM PLATE 5" X 5" X 1/4
7	101CM1079	ALUM EXTRUSION 3" X 15"
J	151-08PZ0033	SMS 3/8" X 1"LG DT2000
M	151-08PZ0020	SMS 5/16" X 1" ZP

2a. Front cap preparation.

1. **Figure 1.** Measure the overall width of the trailer.
2. **Figure 2.** Cut both ends of the cap as per the measured width and cut the top rod at a 35º angle.

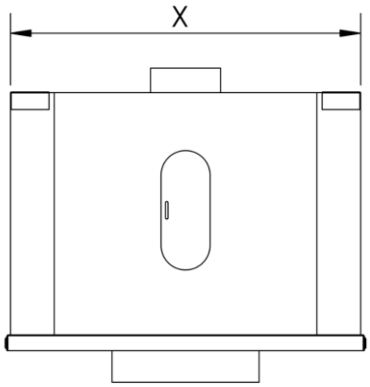

Figure 1

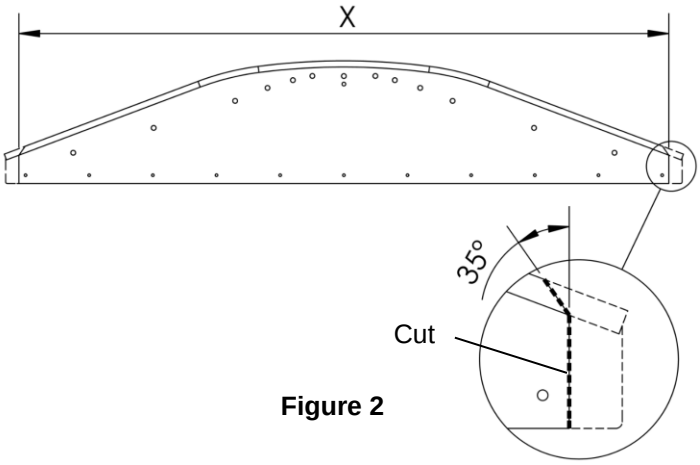

Figure 2

3. **Figure 3.** Adjust the trays' width: they must project **3/16"** from the trailer front. The corners of the trays must be **3"** from the base of the cap.
4. Tighten the trays' nuts.
5. Install the bolt (2), the washers (4) and the nuts (3) on the cap.

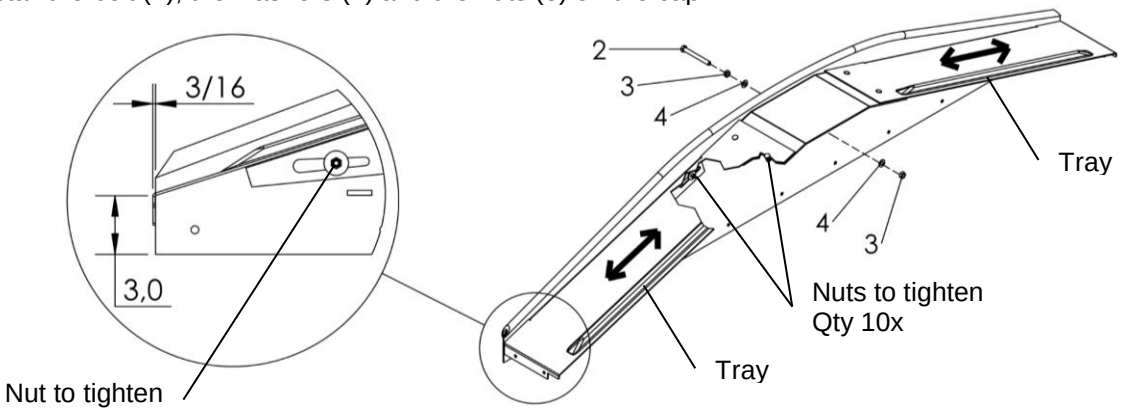

Figure 3

2b. Cap installation

1. Lay the cap on the trailer.
2. **Figure 4.** Make sure the cap is well supported. Drill **Ø21/64''** and screw both extremities of the cap.
3. Drill and screw the other 9 screws on the front.

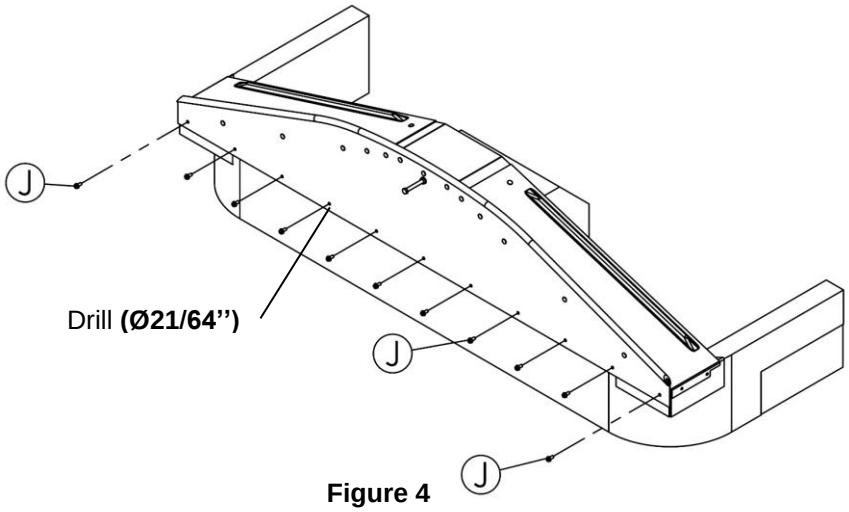

Figure 4

4. **Figure 5.** Drill **Ø17/64''** and screw the screws on each side (qty 4x).

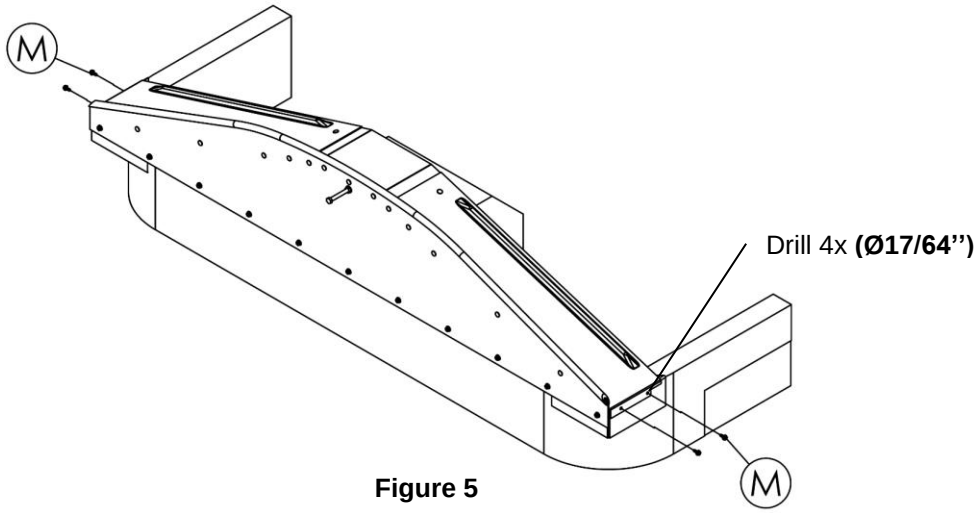

Figure 5

NOTE
• If the front cap is not perfectly vertical after the install, unscrew the 4 bolts from the center tray and make the necessary adjustments. 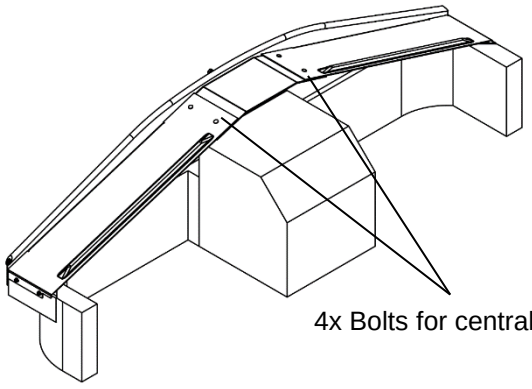

5. Cut the support rod (7) to the required length.
6. **Figure 6.** Weld the support (7) and the plate (6) on the cylinder cage

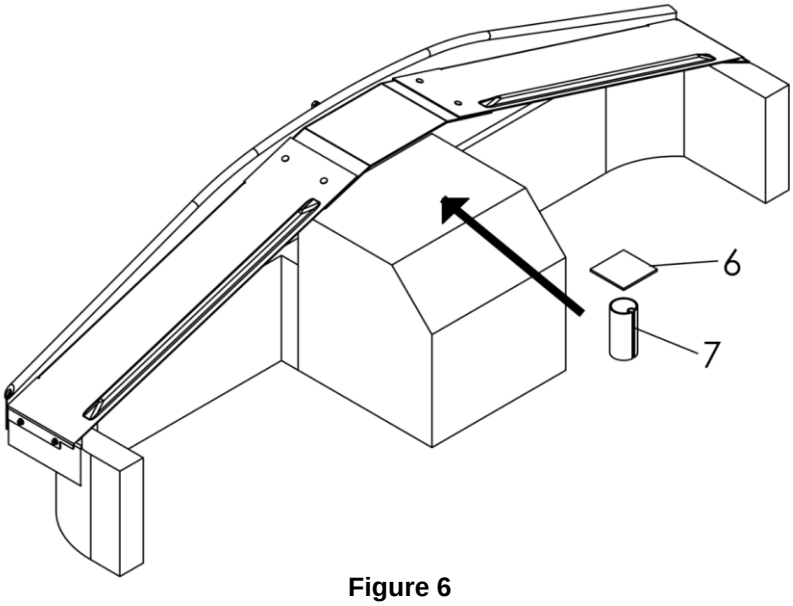

Figure 6

7. **Figure 7.** Apply silicone on all joints of the cap.

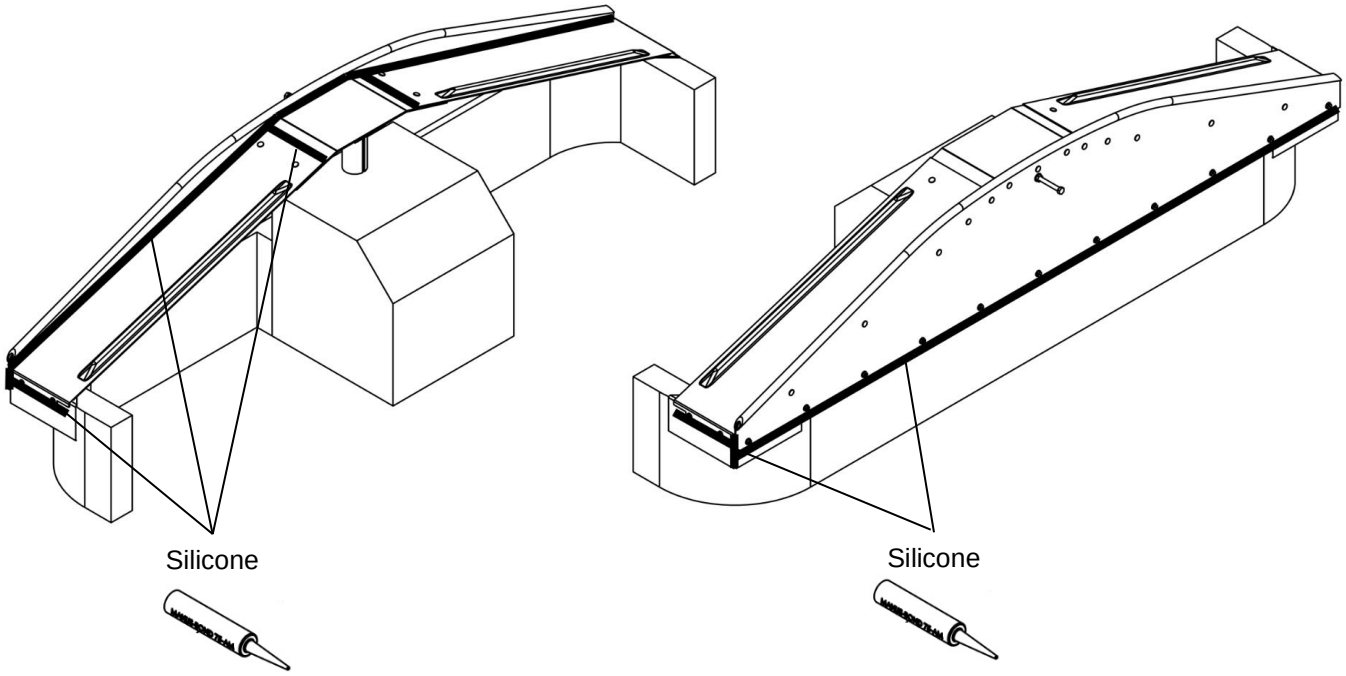

Figure 7

Step 3. Cross-bows

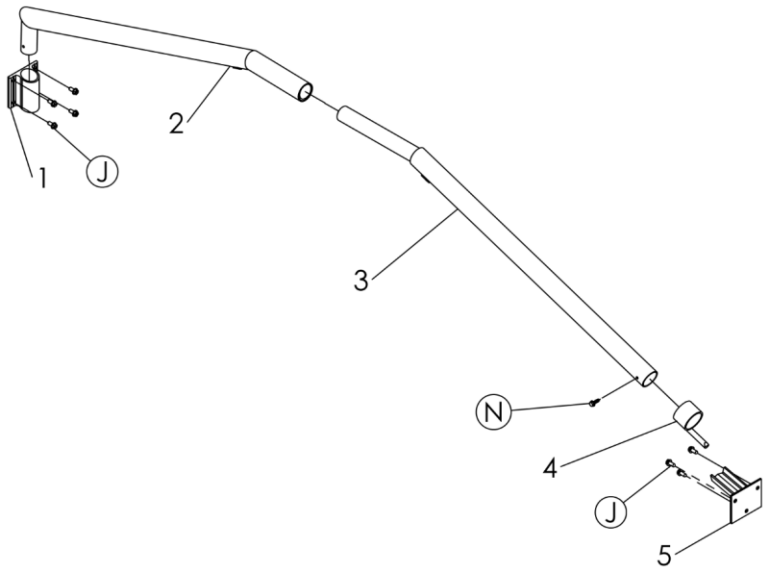

Item	Part #	Description
1	101CM1122-2	DRILLED CROSS-BOW PIVOT
2	101SA1007-(10/12/14/16)	CROSS-BOW PIVOT SIDE (10/12/14/16)
3	101SA1008-(10/12/14/16)	CROSS-BOW SADDLE SIDE (10/12/14/16)
4	101SA0005	CROSS-BOW LOCK RING
5	101SA0003-(10/12/14/16)	CROSS-BOW SADDLE (10/12/14/16)
J	151-08PZ0033	SMS 3/8'' 1''LG DT2000
N	151-06PZ0015	METAL SCREW 5/16-18 1"LG ZP TYPE1

3a. Cross-bow pivots and saddles

1. Identify on which side the cross-bow pivots must be installed. (Fixed tarp side: **Passenger** or **Driver**).

NOTE

- Cross-bow pivots are always installed **on the same side** as the fixed side of the tarp.

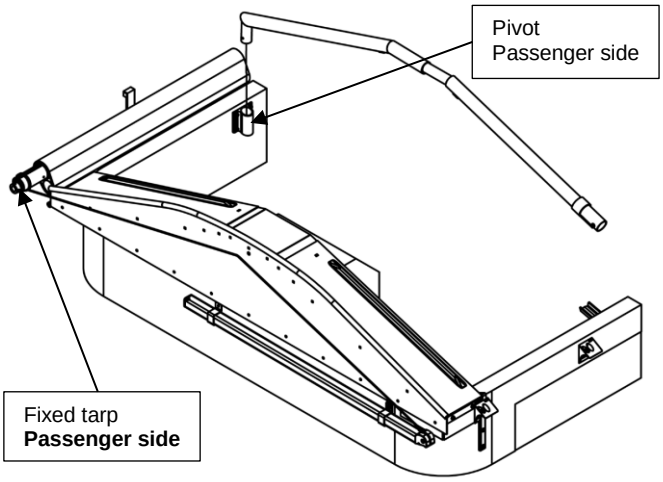

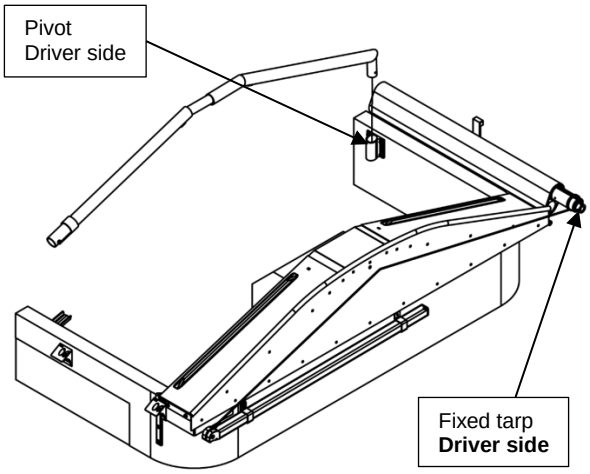

2. Make a mark on each side, at the location of the pivots and cross-bow saddles, as per the measurement sheet provided in appendix - specifically for the trailer.

NOTE	
• The image beside presents an ***example*** of the drawing provided with the system. • A trailer 38 feet long **or less** requires one cross-bow and one 3-inch diameter central tube. • In this example, the central cross-bow will be **2" lower** than the front cap and back cross-bow.	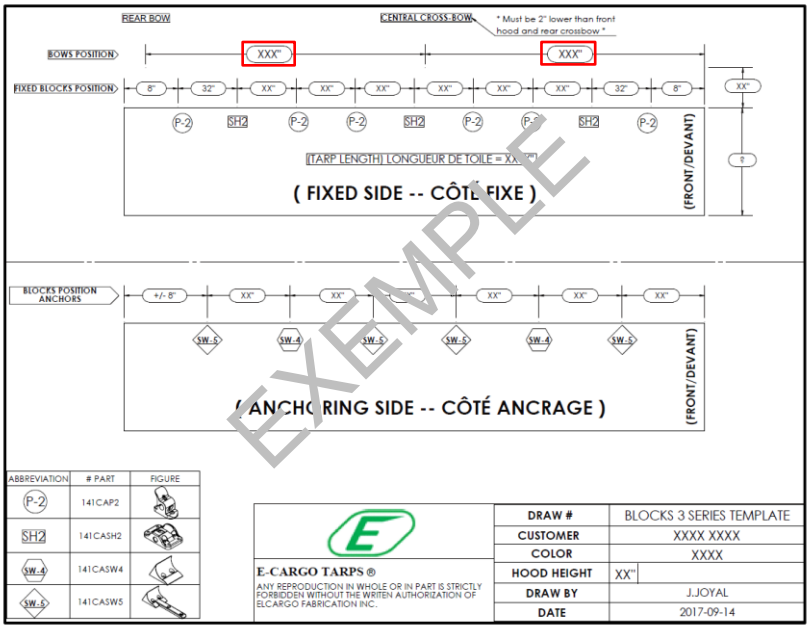
• The image beside presents an ***example*** of the drawing provided with the system. • A trailer 38 feet long **or more** requires two cross-bows and one 2-inch diameter central tube. • In this example, all the cross-bows will be at the **same height.**	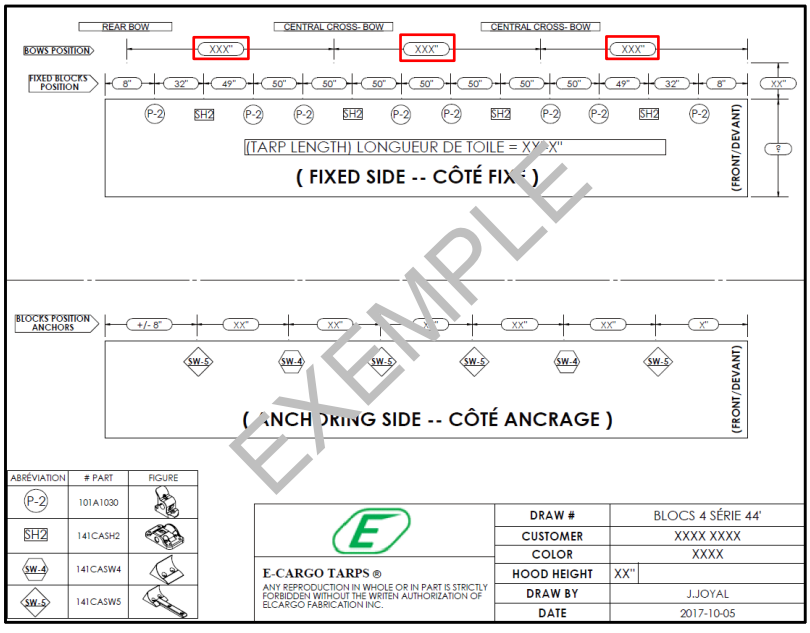

NOTE
• The installation method for the pivots and cross-bow saddles changes according to the type of upper rail (**aluminum**, **steel** or **wood** rails). Determine the type of upper rail on the trailer and follow the corresponding steps.

3b. Aluminum upper rail

NOTE
• Following the interior geometry of the upper rail, a bent plate must be welded on each side of the trailer to allow the installation of the cross-bow pivots and saddles. • Those plates are provided with the system.

Example :

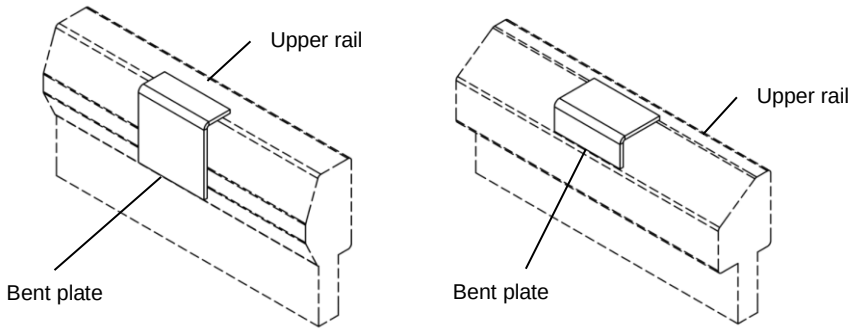

Cross-bow saddle

1. **Figure 1.** Align the center of the cross-bow pivot (1) with the mark previously made by hand.
2. Align the top with the upper rail.

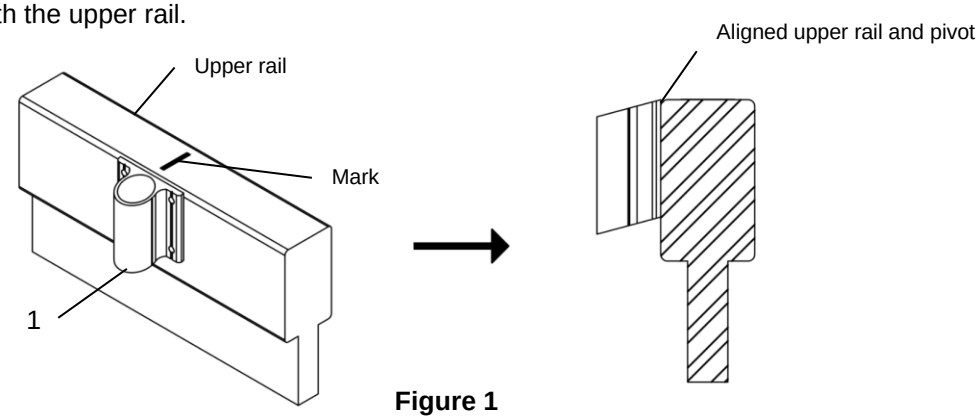

Figure 1

NOTE
• Before bolting the pivot in place, make sure the height is correct. • If the cross-bow is too high, it will induce a pressure point on the tarp. • If the cross-bow is too low, it will create a void space making the tarp vibrate with the wind. • If the upper rail is narrow, lower the pivot to minimize the pressure point. • If the upper rail is too wide, reduce the void space by raising the pivot. • Improper positioning of the pivot will cause premature wear on the tarp.

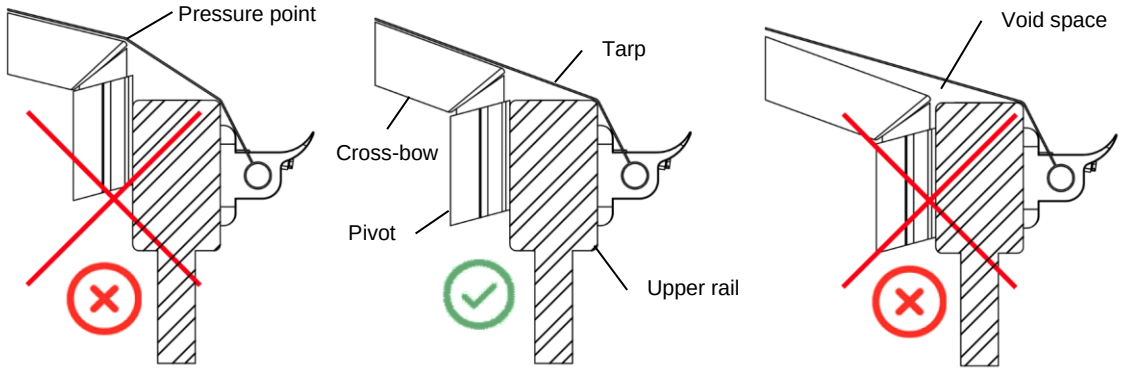

3. **Figure 2.** Drill holes and screw the four screws (J)

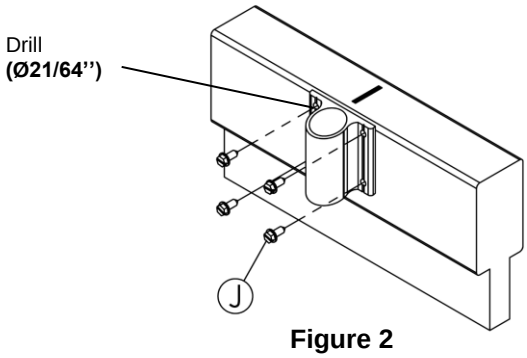

Figure 2

Cross-bow saddle

4. **Figure 3.** Align the center of the cross-bow saddle (5) with the mark previously made by hand and align the top with the upper rail.

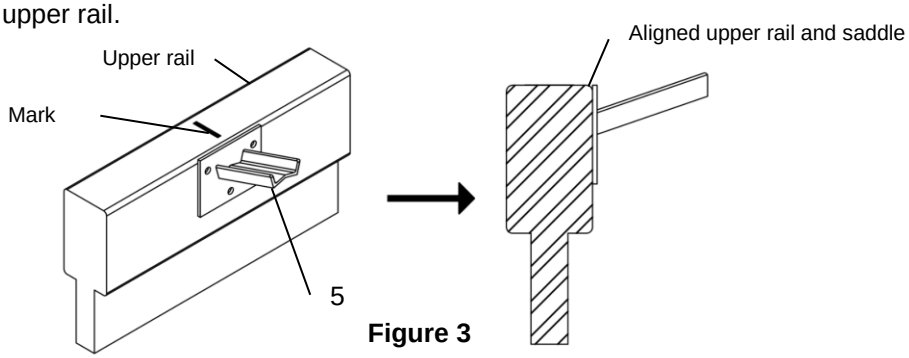

Figure 3

NOTE
• Before bolting the saddle in place, make sure the height is correct. • If the cross-bow is too high, it will induce a pressure point on the tarp. • If the cross-bow is too low, it will create a void space making the tarp vibrate with the wind. • If the upper rail is narrow, lower the saddle to minimize the pressure point. • If the upper rail is too wide, reduce the void space by raising the saddle. • Improper positioning of the saddle will cause premature wear on the tarp.

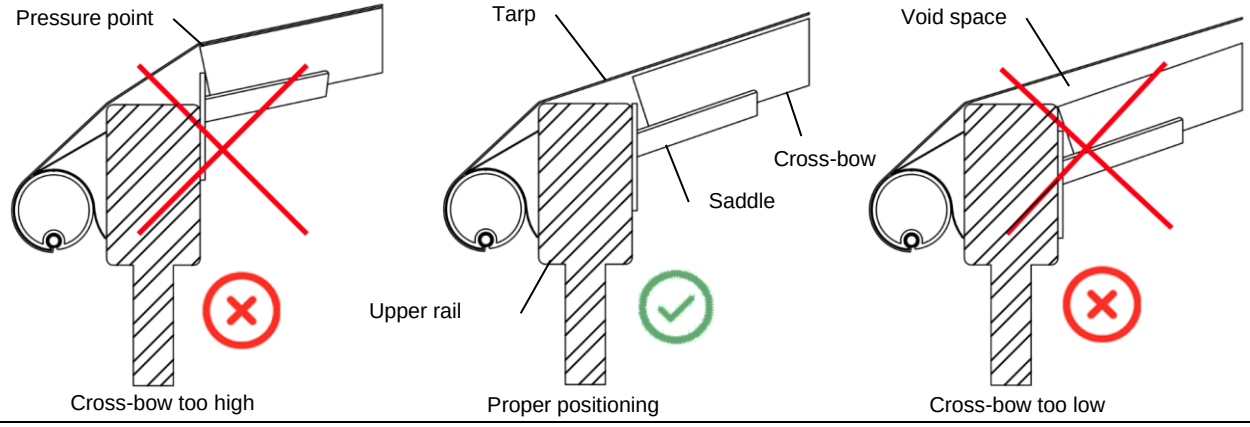

5. **Figure 4.** Drill holes and screw the three screws (J).

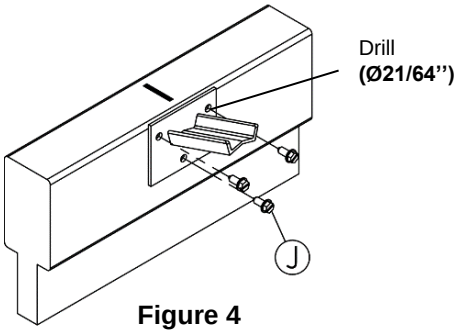

Figure 4

3c. Wood beam as the upper rail

NOTE
• When the trailer is equipped with wood beams, a reinforcement plate must be welded on each side. Those plates are provided with the system.

1. **Figure 5.** Measure the height of the wood beam (H).
2. Cut the reinforcement plate to the required length.
3. Weld the base of the plate on the trailer body.

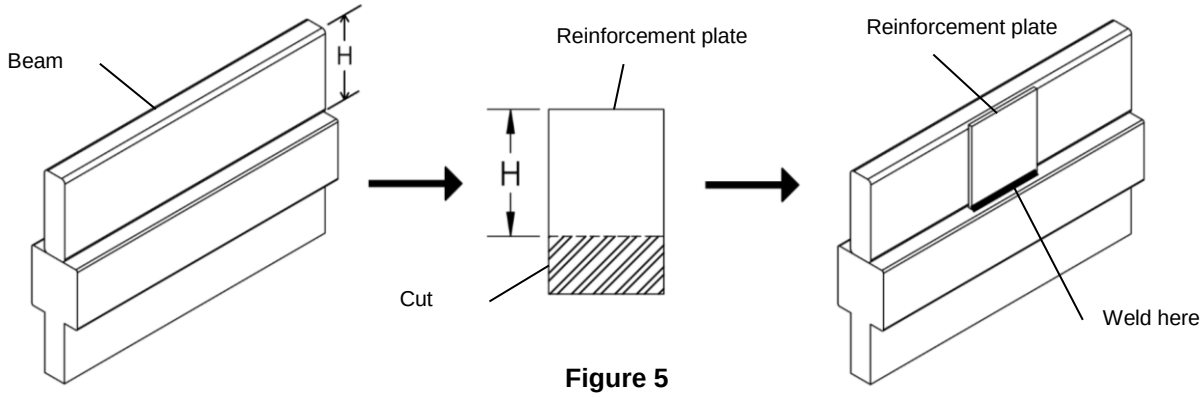

Figure 5

Cross-bow pivot

3. **Figure 6.** Align the center of the cross-bow pivot with the mark previously made by hand and position the top of the pivot 3/8” lower than the top of the wood beam.

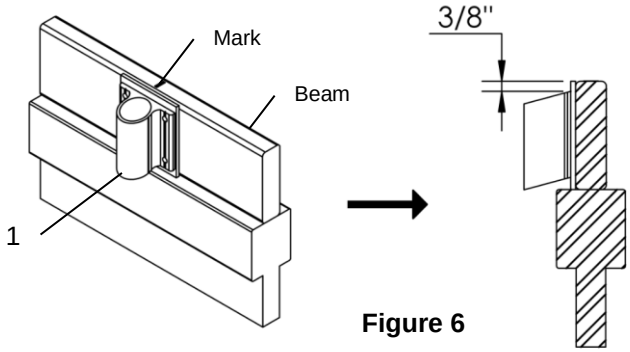

Figure 6

NOTE
• Before bolting the pivot in its final position, make sure the height is correct. • If the cross-bow is too high, it will induce a pressure point on the tarp. • If the cross-bow is too low, it will create a void space making the tarp vibrate with the wind. • If the upper rail is marrow, lower the pivot to minimize the pressure point. • Improper positioning of the pivot will cause premature wear on the tarp.

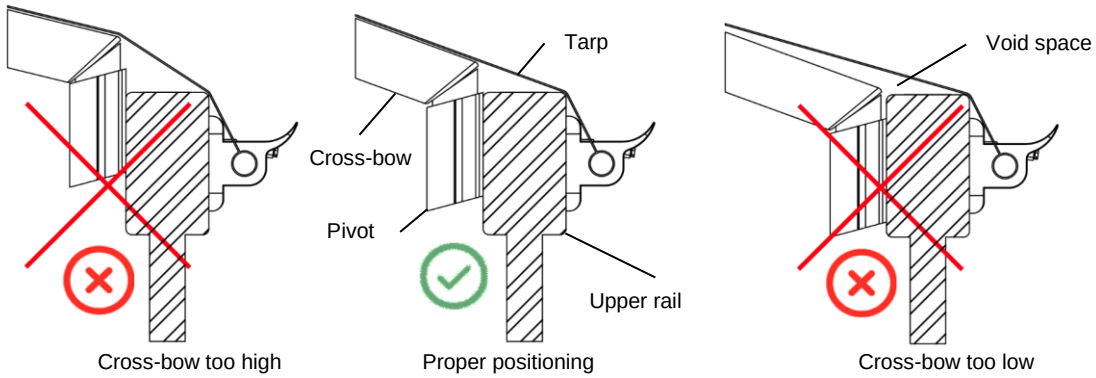

4. **Figure 7.** Drill the upper 2 holes through the aluminum plate and the wood beam.
5. Install the 3/8” bolts, the washers and the nuts in the upper holes.
6. Drill the bottom 2 holes and install the screws (J).

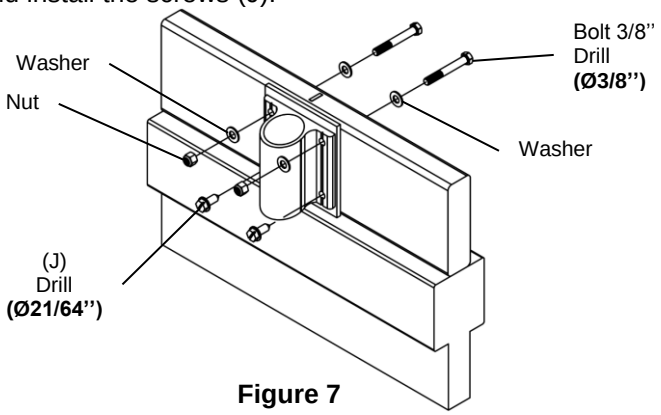

Figure 7

Cross-bow saddle

7. **Figure 8.** Align the center of the cross-bow saddle with the mark previously made by hand and position the top of the saddle 3/8” lower than the top of the wood beam.

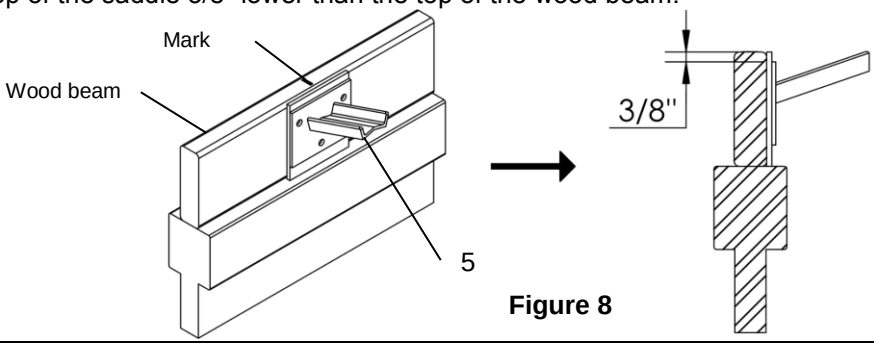

Figure 8

NOTE
• Before bolting the saddle in its final position, make sure the height is correct. • If the cross-bow is too high, it will induce a pressure point on the tarp. • If the cross-bow is too low, it will create a void space making the tarp vibrate with the wind. • If the upper rail is narrow, lower the saddle to minimize the pressure point. • Improper positioning of the saddle will cause premature wear on the tarp.

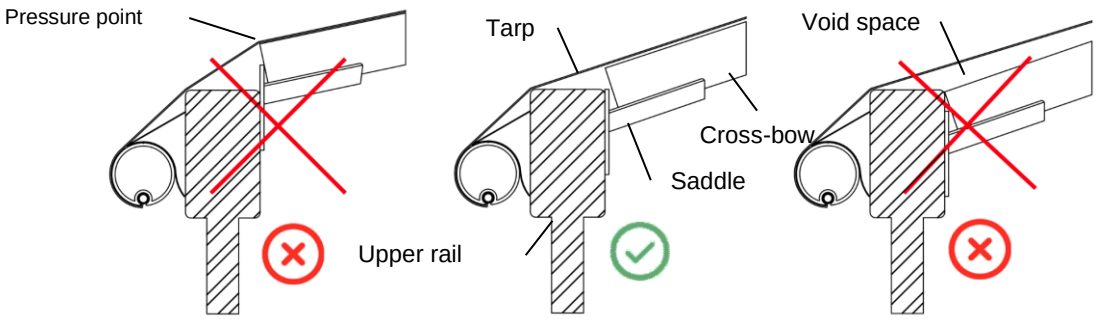

8. **Figure 9.** Drill **Ø3/8’’** the upper 2 holes through the aluminum plate and wood beam
9. Install the 3/8” bolts, the washers and the nuts in the upper holes.
10. Drill **Ø21/64’’** the bottom hole and install the screws (J).

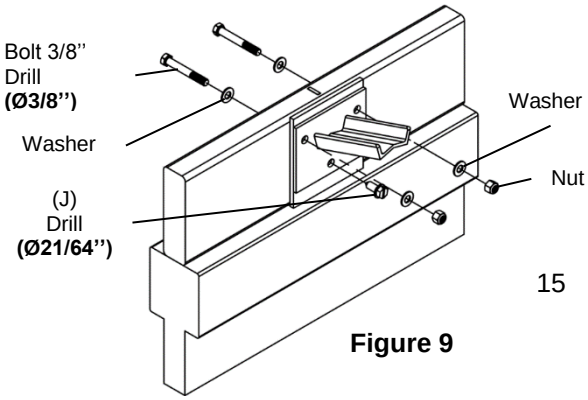

Figure 9

3d. Installation of the rear cross-bow

1. **Figure 10.** Measure the height (H) of the front cap.

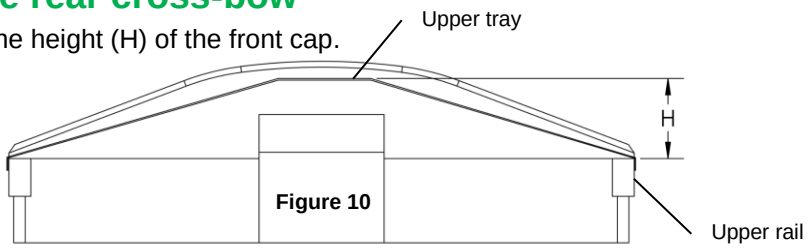

Figure 10

2. **Figure 11.** Measure the widths at the front (F) and rear (R) of the trailer

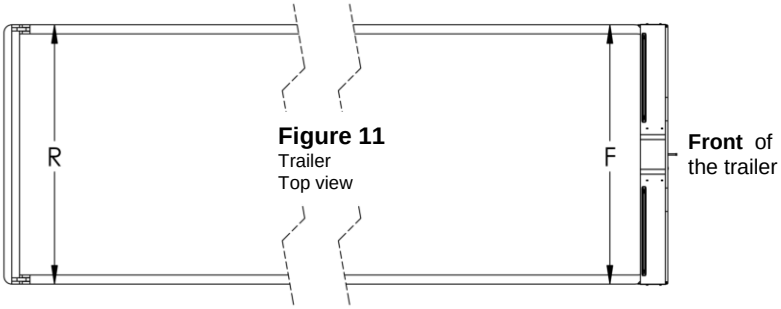

Figure 11
Trailer
Top view

3. **Analysis of measurements:**

3.1. If both widths are **identical**: the rear cross-bow must be at the **same height** as the front cap.

3.2. **Figure 12.** If the **rear width** is **larger** than at the front, the rear cross-bow must be **lower** with a 1:1 ratio.

Example
Figure 12

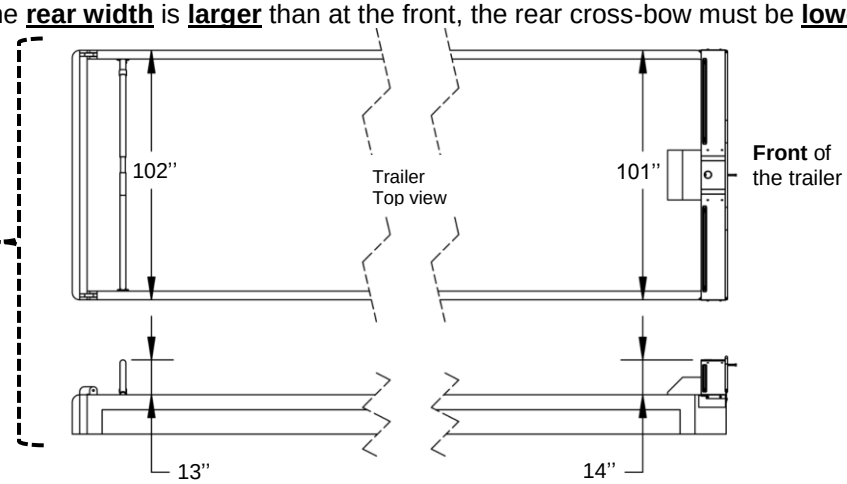

3.3. **Figure 13.** If the **rear width** is **smaller** than at the front, the rear cross-bow must be **higher** with a 1:1 ratio.

Example
Figure 13

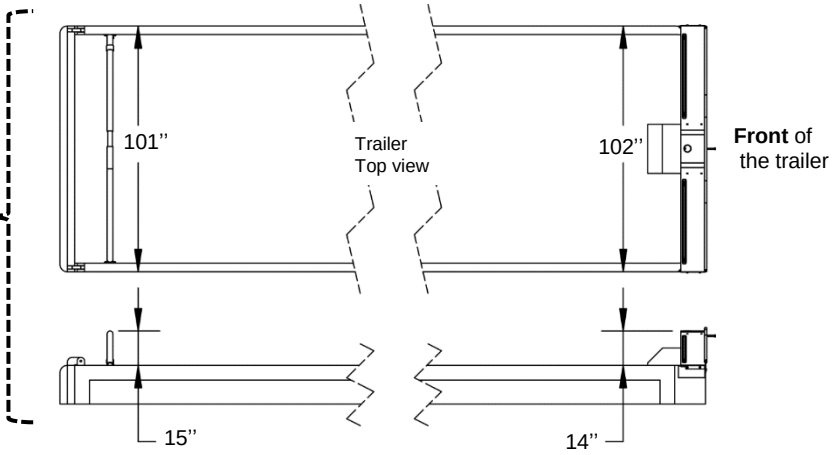

4. **Figure 14.** Install the first cross-bow section (2) in the cross-bow pivot and slide-in the second section (3).
5. Slide-in the locking collar (4) on the cross-bow and install the locking screw (N).
6. Lower the cross-bow on the saddle and push the locking collar downwards to immobilize the cross-bow.

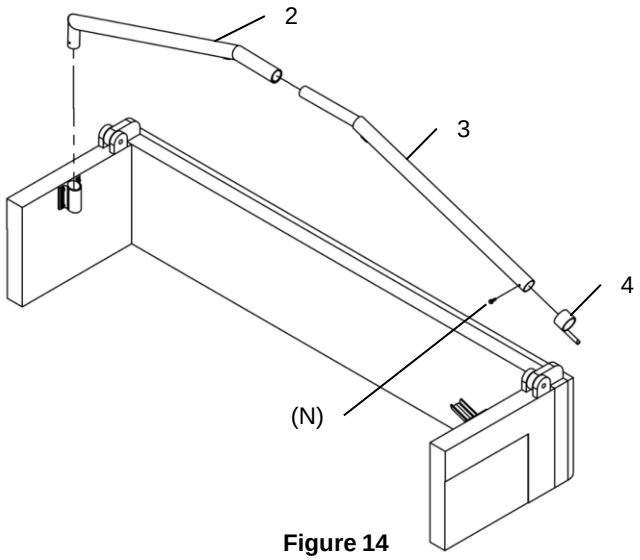

Figure 14

7. **Figure 15.** Apply an upward pressure at the center of the cross-bow to reach the desired height and make a weld “Tack” at the junction point of the two sections.
8. Verify that the cross-bow is at the proper height and make sure it is completely vertical.
9. **Figure 16.** Weld the junction point of the two sections completely.

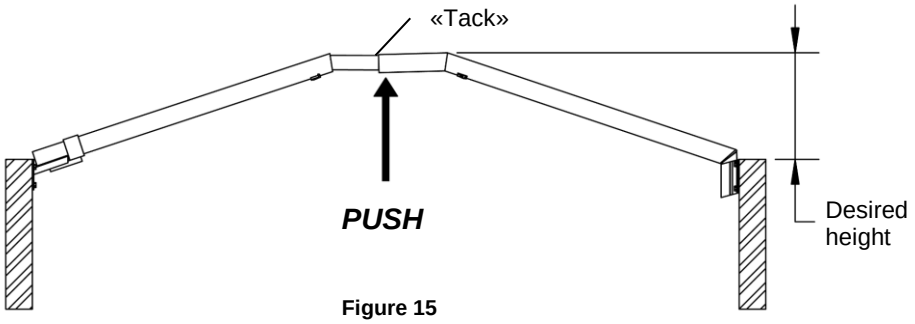

Figure 15

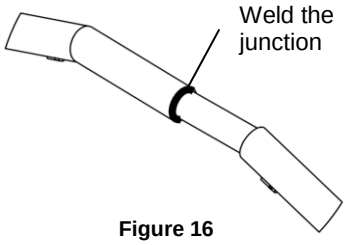

Figure 16

10. **Figure 17.** Weld the support bolt at the center of the rear cross-bow and make sure it is perfectly horizontal.

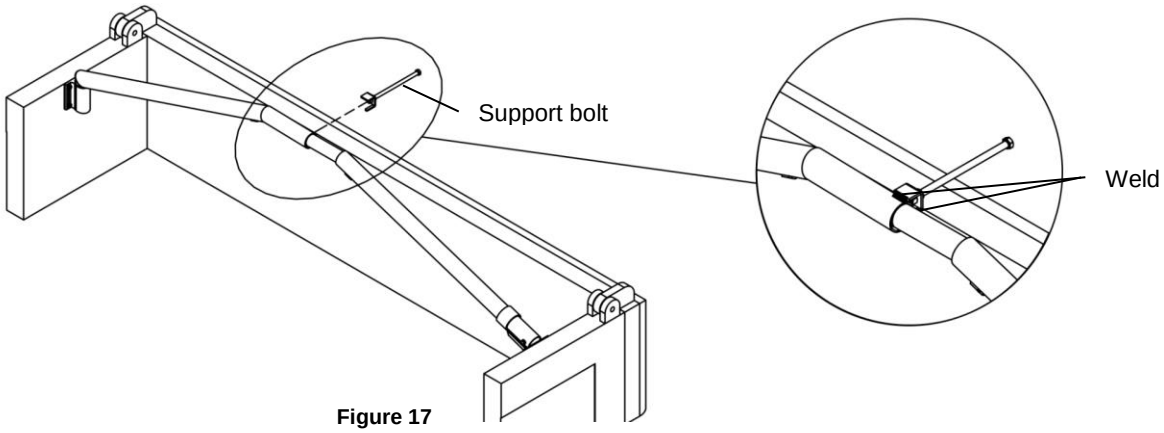

Figure 17

11. Unscrew the 10” bolt from its anchoring plate to proceed with the installation of the rear tarp.
12. Perform the necessary paint touch ups at the junction point of the two cross-bows sections.

Central cross-bows

13. **Figure 18.** Install the first section of the cross-bow (2) in the cross-bow pivot and slide-in the second section (3).
14. Slide-in the locking collar (4) on the cross-bow and install the locking screw (N).

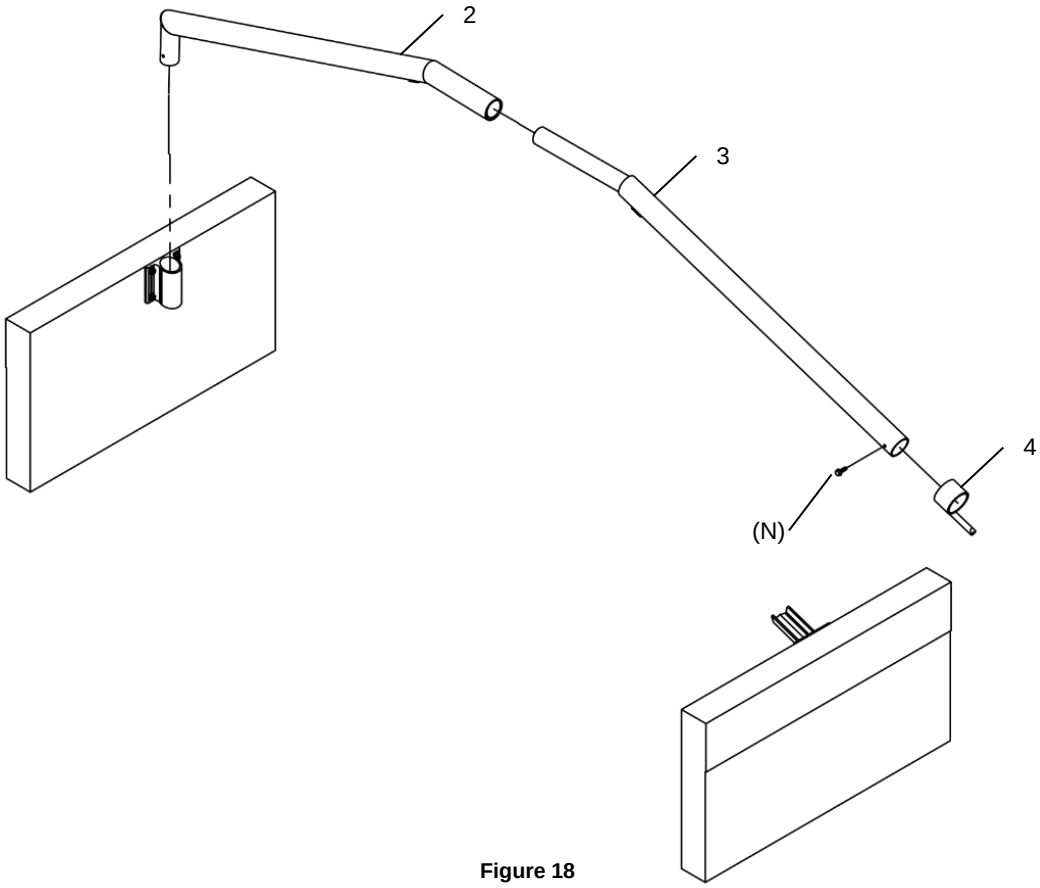

Figure 18

15. Leave the cross-bows as they are at this point. The final adjustments will be performed at step 9a.

Step 4. Back tarp (Back flap)

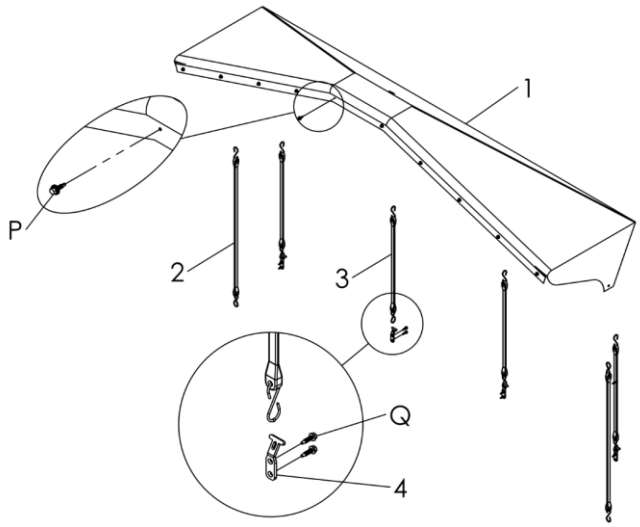

Item	Part #	Description
1	161A1002	BACK TARP
2	101CA1013	31" SNAP STRAP
3	101CA1012	21" SNAP STRAP
4	101CM1055	TENSIONER & BUNGIES HOOK HOLDER
P	101A1053	SELFT-DRILLING SCREWS 1/4 X 1"LG ZP WITH NEOPHREME
Q	151-07PZ0006	SELFT-DRILLING SCREWS 1/4 X 1"LG ZP

1. **Figure 1.** Drill **(Ø13/64'')** 10 holes on the interior side of the rear cross-bow.
2. **Figure 2.** Extend the back tarp and position the tarp corners on the hinges and make sure that the tarp is well centred.

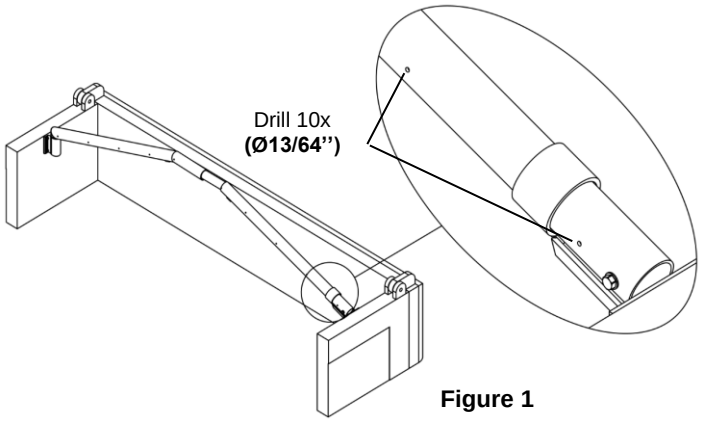

Figure 1

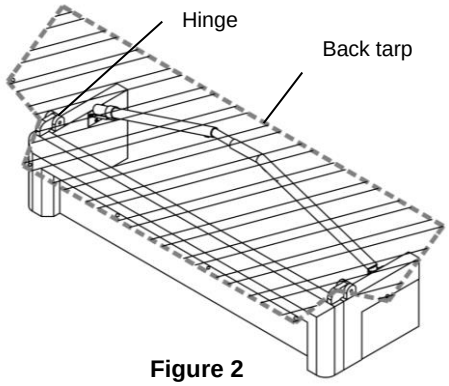

Figure 2

3. **Figure 3.** Install the 10 screws (P) in the previously drilled holes.
4. Allow the tarp to extend an extra 3" and then cut the excess of tarp.

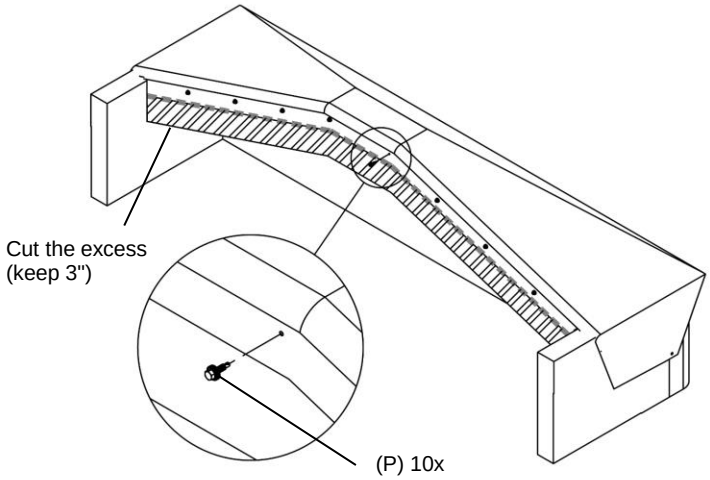

Figure 3

5. **Figure 4.** Drill a small hole in the tarp, aligned with the support bolt, and install the 10” support bolt.

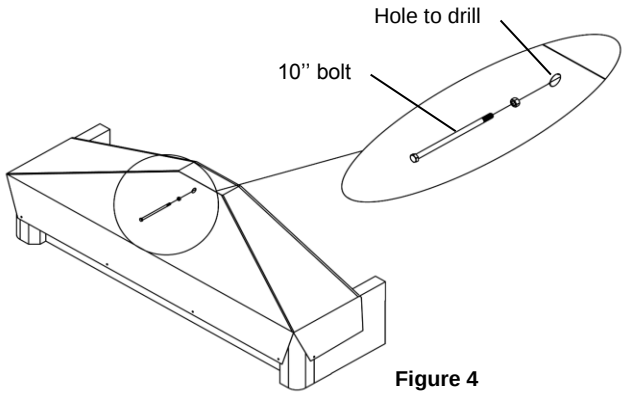

Figure 4

6. **Figure 5.** First, hook the snap straps (2) on each side.
7. Install the anchoring plates (4) with the screws (Q) and snap the rear straps (3).

NOTE
• Bend the upper hooks of the straps to make sure they will not come out of the tarp rings.

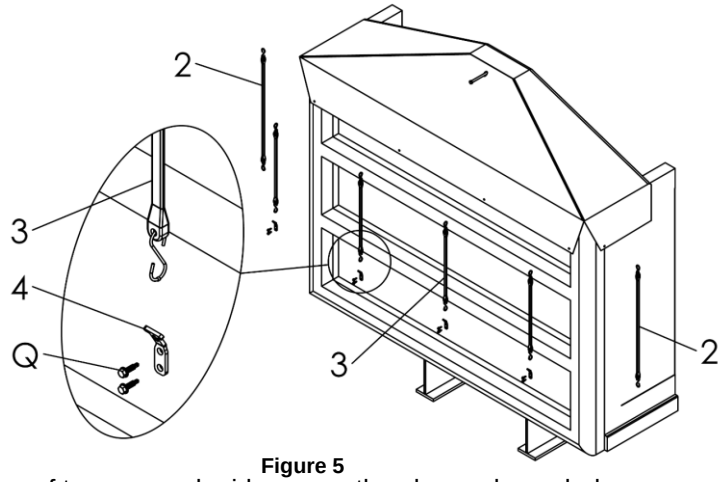

Figure 5

8. **Figure 6.** Cut the excess of tarp on each side as per the shape shown below.
9. **Figure 7.** If needed, to improve tightness of the system, weld the tarp corners over the rear door hinges. Those corners are provided with the system.

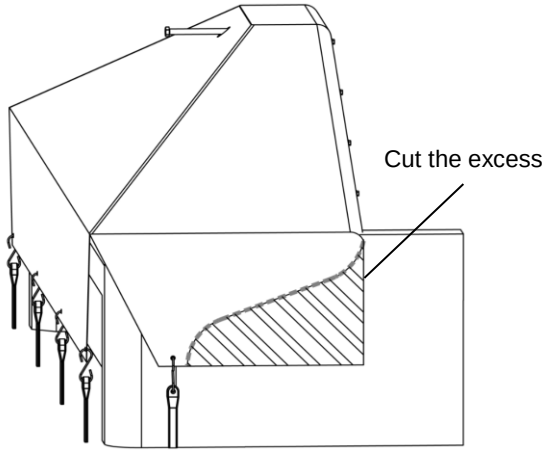

Figure 6

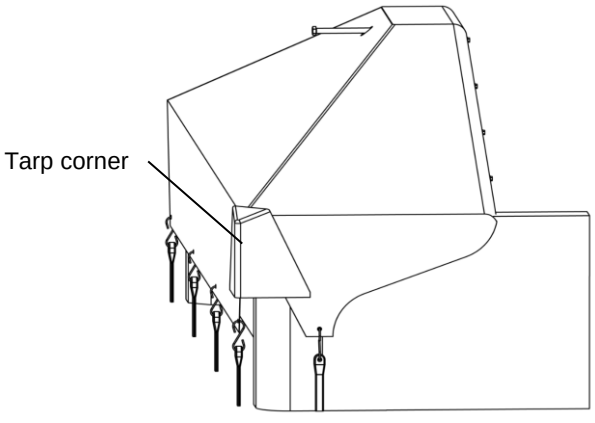

Figure 7

Step 5. Anchor block and grab block

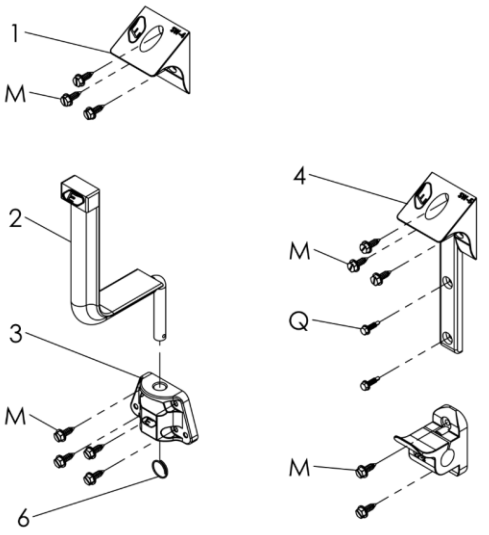

Item	Part #	Description
1	141CASW4	ANCHOR BLOCK SW-4
2	101CM1021-P	PIVOTING SUPPORT
3	141CASH2	BLOCK SH2 FOR PIVOTING SUPPORT
4	141CASW5	ANCHOR BLOCK SW-5
5	141CAP2	P-2 GRAB BLOCK P-2
6	151-09QC38716	COTTER RING
M	151-08PZ0020	SMS 5/16 X 1" ZP
Q	151-07PZ0006	SELFT-DRILLING SCREWS 1/4 X 1"LG ZP

NOTE

- Determine the fixed side of the tarp (fixed tarp side: **passenger** or **driver**).

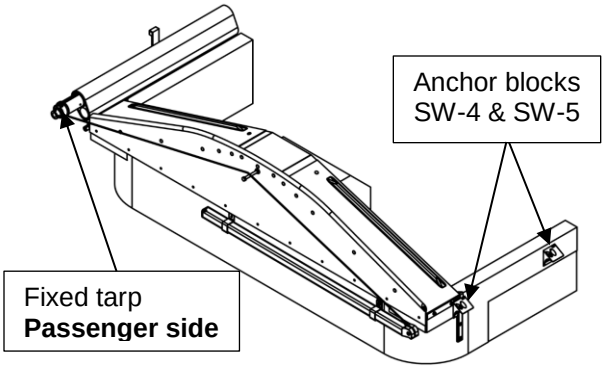

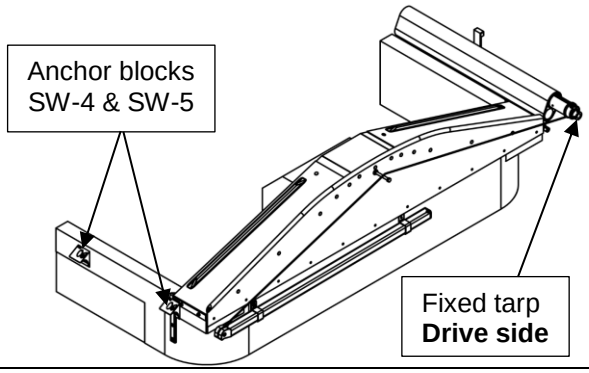

1. **Figure 1.** Identify the position of the blocks as per the measurement sheet provided in appendix - specifically for the trailer.

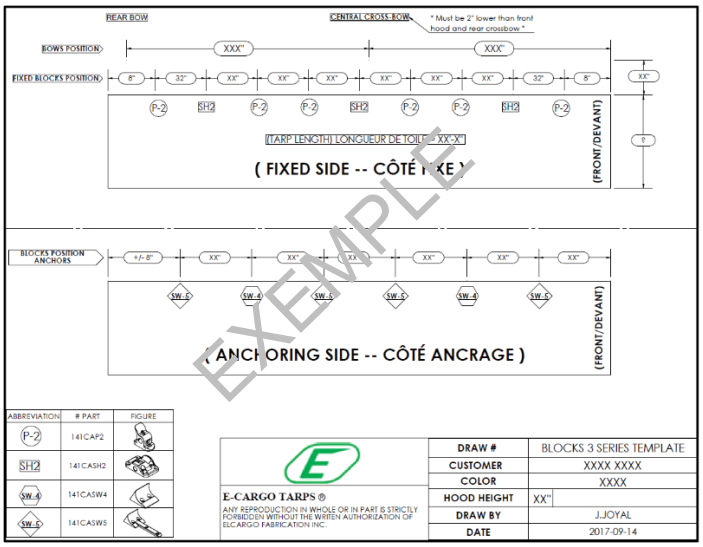

Figure 1

Advice	
• Stick masking tape strips at the base of the trailer body to facilitate the identification and positioning of the blocks. • The tapes will make it possible to verify the proper positioning of the blocks before drilling the trailer body. • The tapes represent the blocks: P-2 and SW-4 & SW-5. • The horizontal tapes represent the SH-2 blocks.	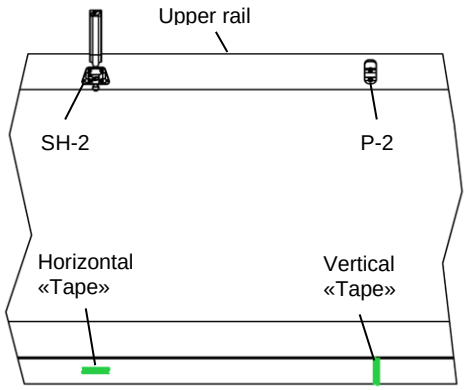

NOTICE

- Always make sure that the upper rail has no sharp edge or any sharp component that would damage the tarp.
- If necessary, sand off and cut all potential hazards to the tarp.
- A sharp upper rail, or if it comprises sharp components, can damage the tarp and affect the product warrantee.

P-2 and SH-2 blocks

2. **Figure 2.** Position the P-2 blocks (5) 1" from the upper rail.
3. Drill Ø17/64'' and install the screws (M).

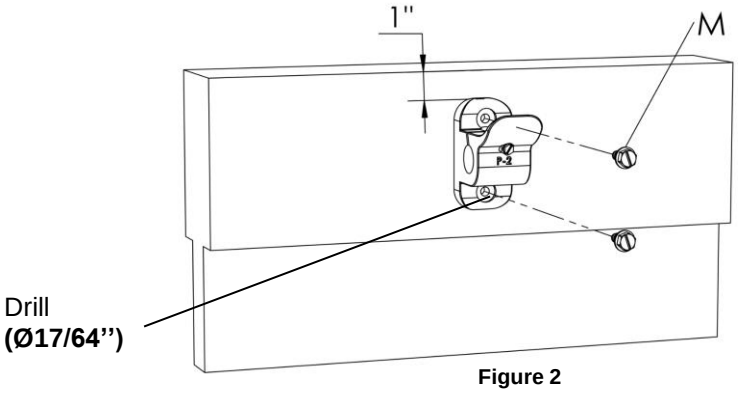

Figure 2

4. **Figure 3.** Position the SH-2 blocks (3) 2¼" from the upper rail.
5. Drill Ø 17/64'' and install the screws (M).
6. **Figure 4.** Temporarily install the pivoting supports (2) into the SH-2 blocks.

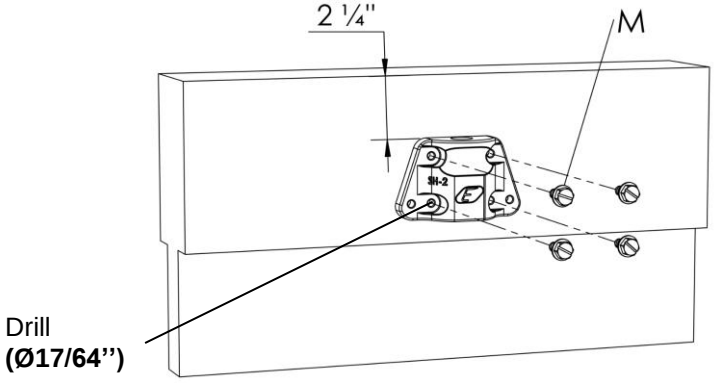

Figure 3

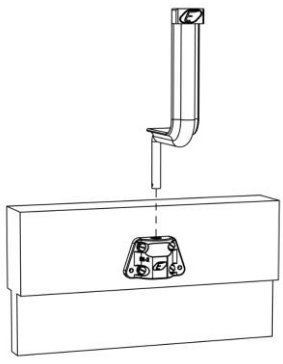

Figure 4

SW-4 and SW-5 blocks

7. **Figure 5.** Position the SW-4 blocks (1) 1” from the upper rail.
8. Drill (Ø17/64’’) and install the screws (M).

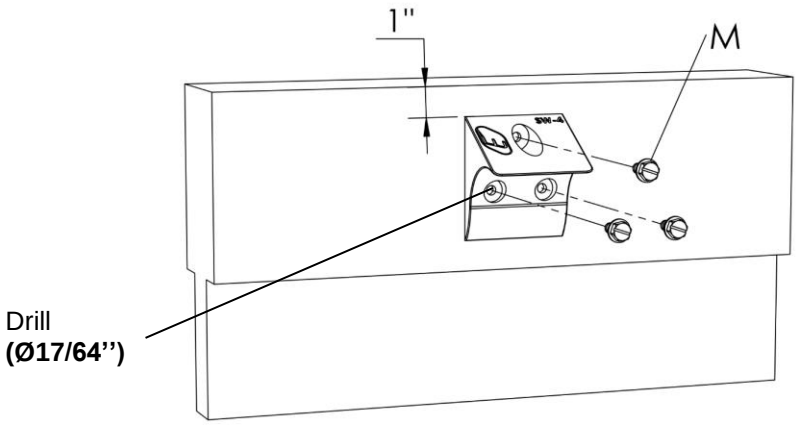

Figure 5

9. **Figure 6.** Position the SW-5 blocks (4) 1’’ from the upper rail.
10. Drill (Ø17/64’’) and install the screws (M).
11. Install the self-drilling screws (Q).

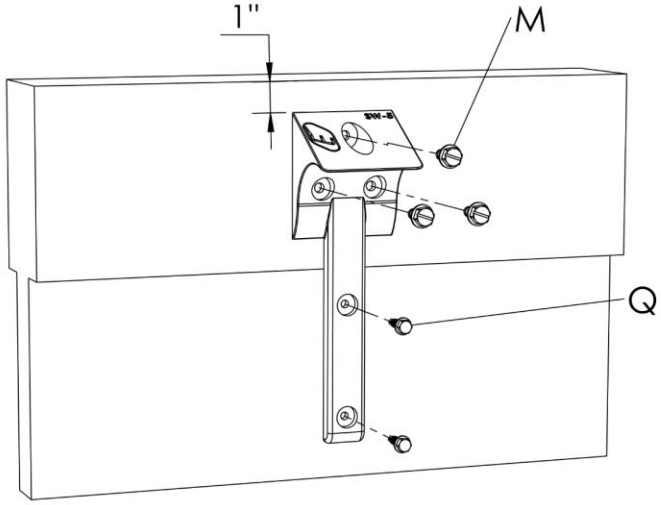

Figure 6

NOTE	
• In some cases the SW-5 will not fit exactly as described. In such case, the SW-4 block can be combined to a plastic strip.	

Step 6. Main Tarp

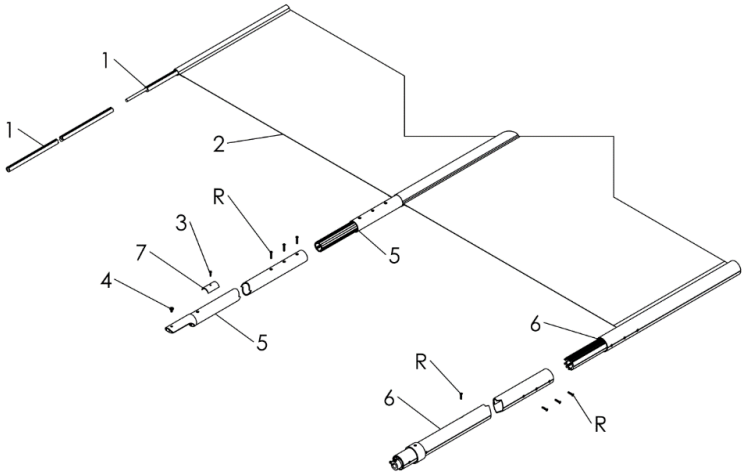

Item	Part #	Description
1	710R03XX	ANCHORING TUBE
2	710C3XXX	MAIN TARP
3	151-09PZPH12141	SELFT-DRILLING SCREWS
4	101A1063	SCREW: CENTRAL NEOPHREME TUBE
5	710R00XX	CENTER PIPE
6	710R01XX	3'' ROLLING PIPE
7	151CA2068	PLASTIC U-CLAMP
R	151-09QCFT14112	FLAT TORX SCREW 1/4 X 1 1/2

6a. Tarp assembly

1. On a clean surface, lay down the tarp in the same orientation as it will be installed on the trailer.
2. **Figure 1.** Insert the anchoring tube (1) in the small pocket of the tarp and connect both sections of the anchoring tube (1) with the ½" rod.
3. Use a hammer to rivet the tube. This will allow the rod to stay in place and join the two sections.
4. The anchoring tube must protrude 1" on the exterior side of the tarp.

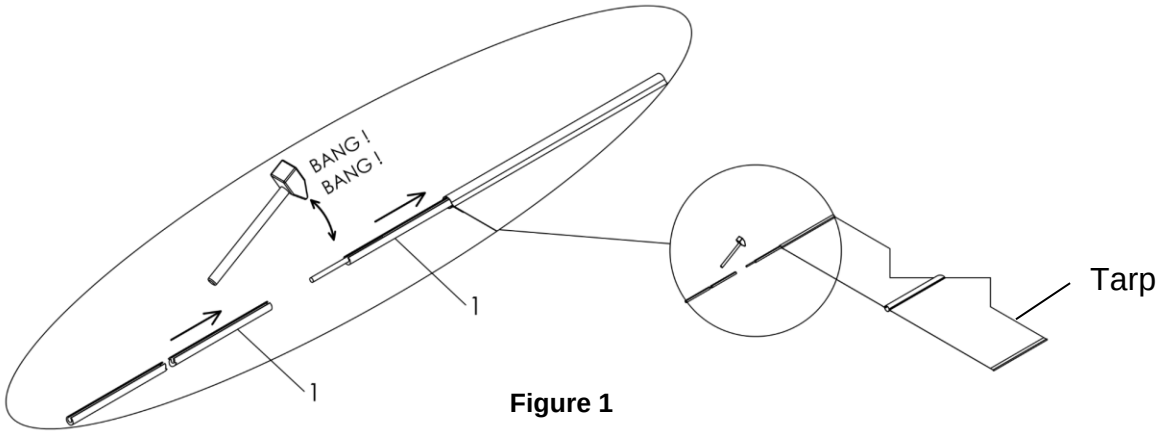

Figure 1

5. **Figure 2.** Slide the central pipe (5) into the central pocket.
6. Connect the union and install the screws (R).

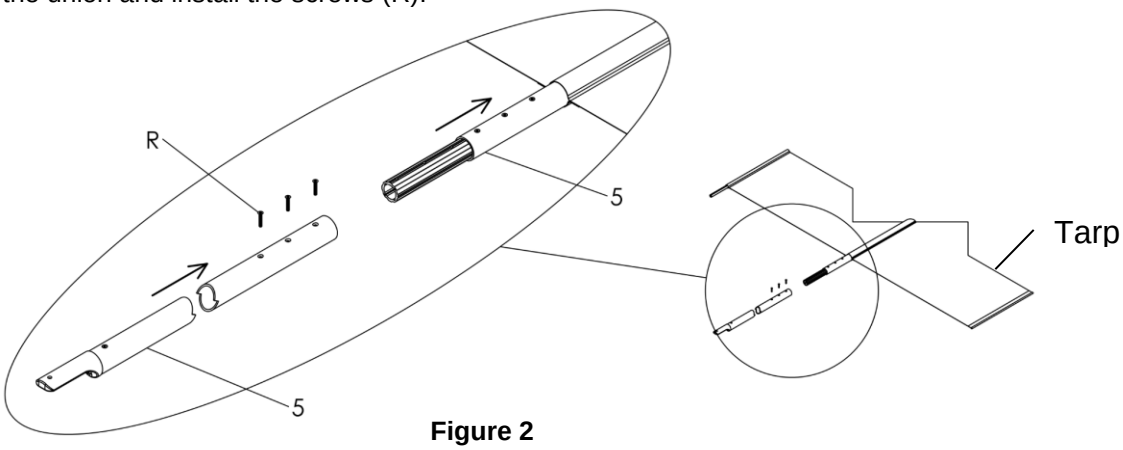

Figure 2

7. **Figure 3.** Push the central tube so that its rear connector is flush with the extremity of the tarp.

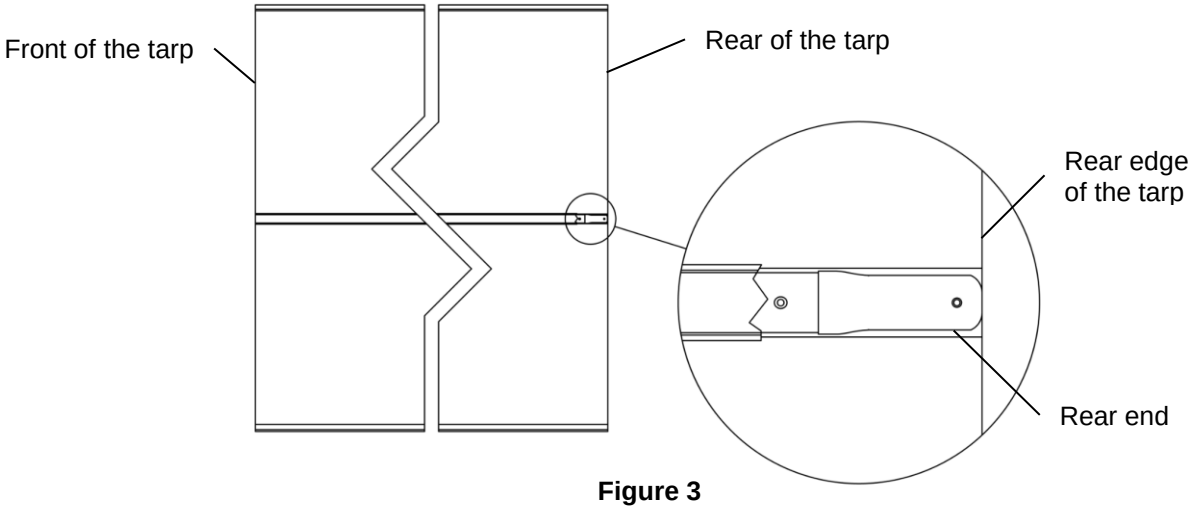

Figure 3

8. **Figure 4.** Remove locking screws (R) at the extremities of the rolling pipe.
9. **Figure 5**. Remove the internal tensioner from the rolling pipe.

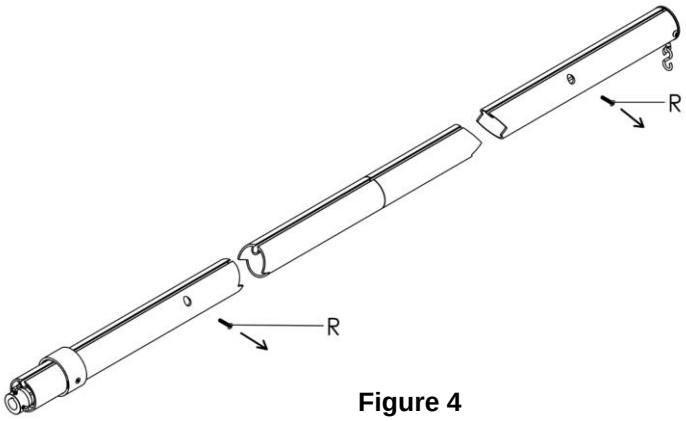

Figure 4

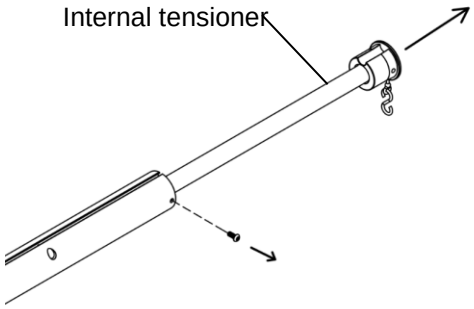

Figure 5

10. **Figure 6.** Engage the rolling pipe on the tarp by sliding in the keeder assembly.
11. Connect the union and install the screws (R).

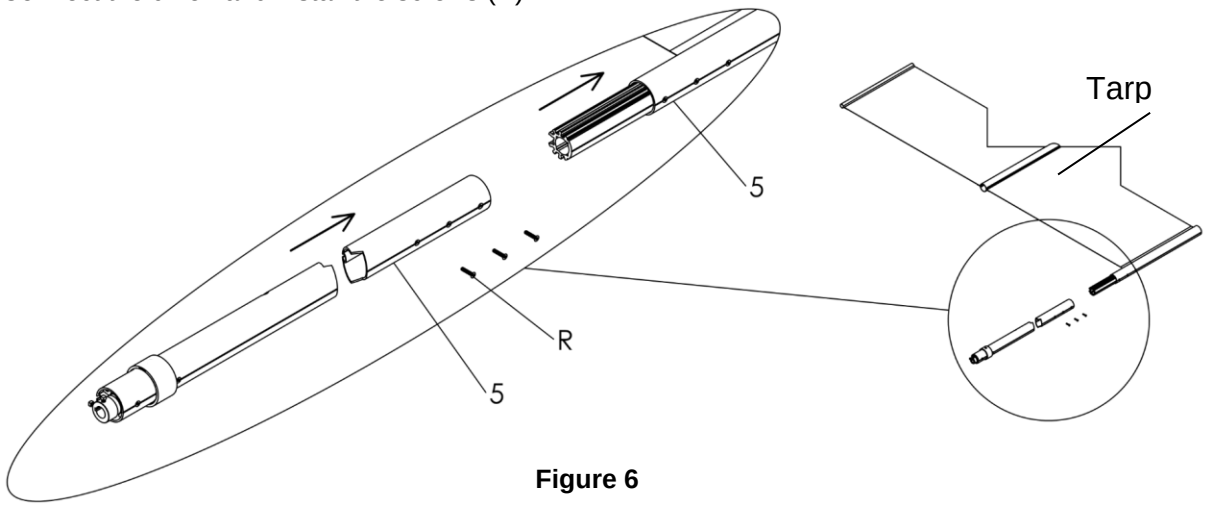

Figure 6

12. Align the tarp with the marks on the rolling pipe front extremity.
13. **Figure 7.** Extend the tarp evenly and install the locking screws back (R) at front and rear.

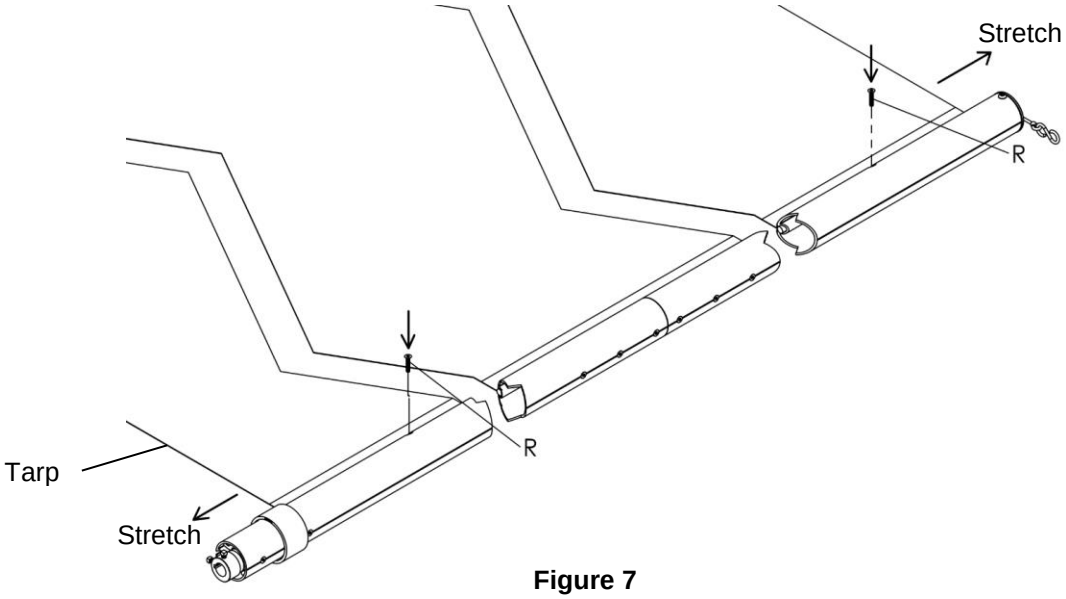

Figure 7

6b Installation of the tarp

1. **Figure 8.** *Wind the rolling pipe up to the center of the tarp and bend the anchoring tube portion in an accordion pattern.*

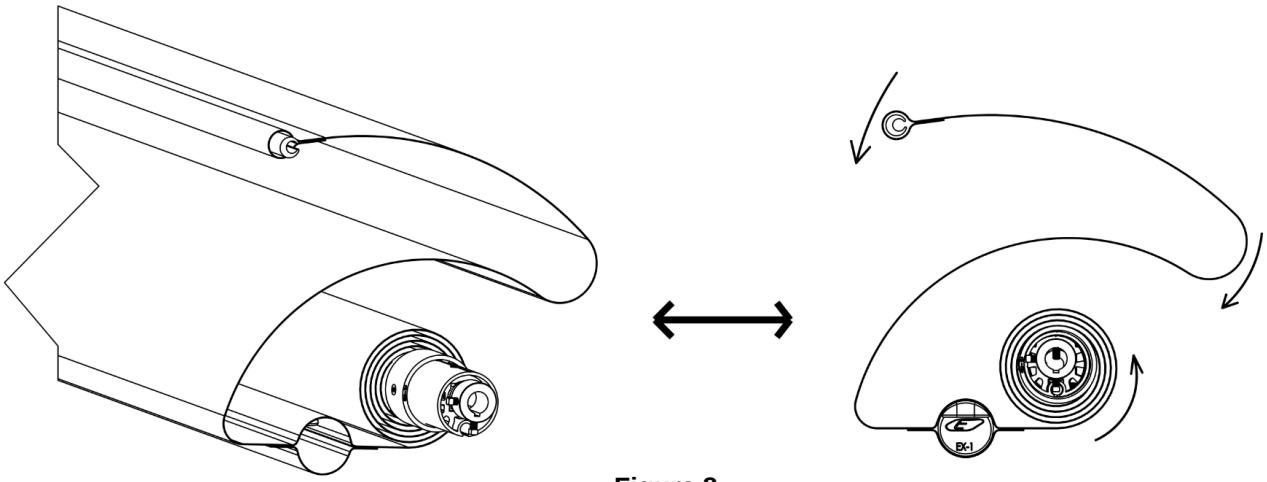

Figure 8

2. Raise the tarp to the center of the trailer body.
3. Extend the section with the anchoring tube.

WARNING
• The handling of heavy parts and can injuries. • Use safe and appropriate lifting devices to raise the tarp on the trailer body. • An inappropriate lifting device can result in serious injuries or death.

4. **Figure 9.** Insert the anchoring tube in the first P-2 block at the front of the trailer.
5. Make sure the tarp is positioned 1” from the edge of the front cap and screw the P-2 block screw.

NOTE
• Make sure the P-2 block screw is completely horizontal when screwed in.

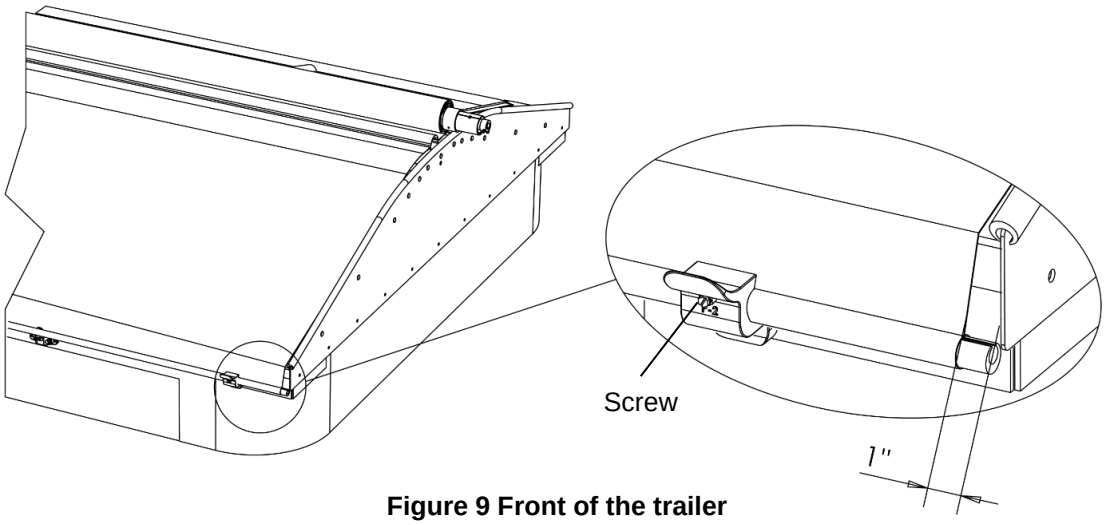

Figure 9 Front of the trailer

6. **Figure 10.** Move to the back of the trailer and insert the anchoring tube in the last P-2 block.
7. Extend the tarp and screw the P-2 block (X) screw (P).

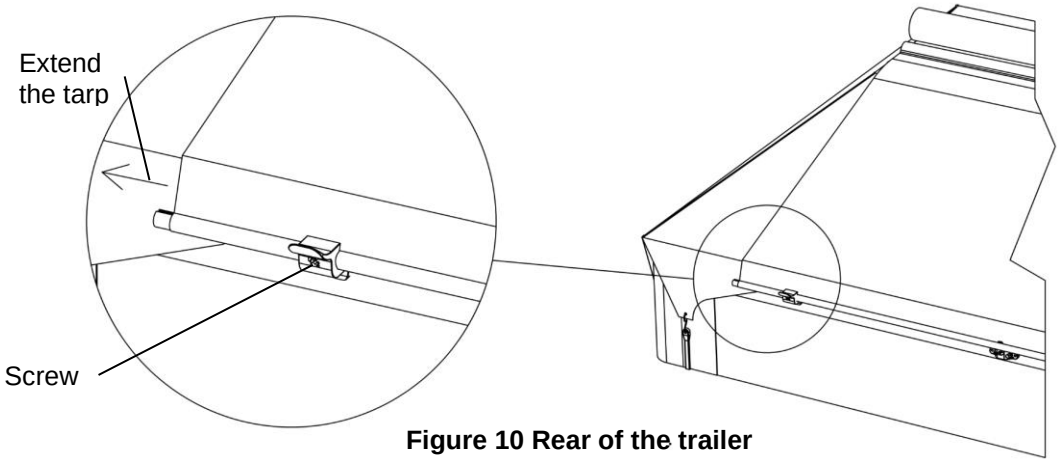

Figure 10 Rear of the trailer

8. Complete the installation of the tarp in the other P-2 blocks.
9. **Figure 11.** For each SH2 block, drill a small hole in the tarp right at the level of the weld joint.
10. Insert the pivoting supports and the locking rings.

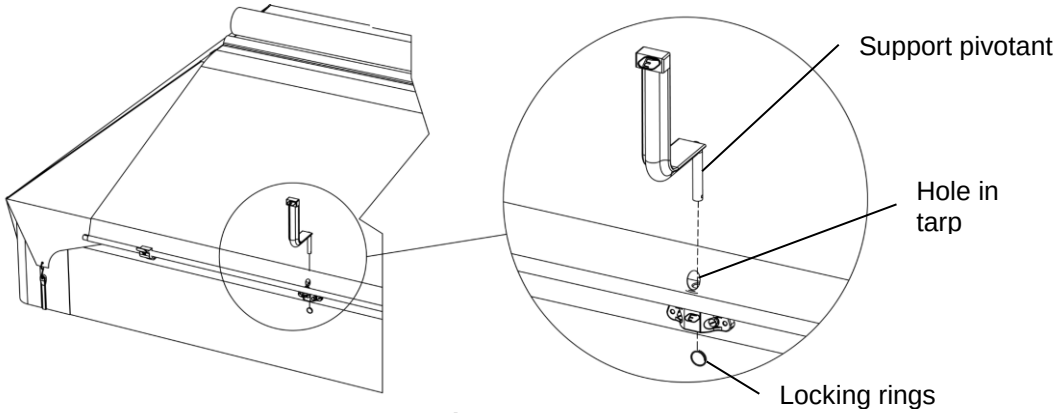

Figure 11

Step 7. Operating mechanism

Item	Part #	Description
1	421A0002-(C/P)	PIVOTING CENTRAL MECHANISM
2	421A0003-(C/P)	COMPLETE ASSEMBLED CRANK
3	421A0008	SUPERIOR TELESCOPIC TUBE ASS'Y
4	421CM0010-R1	TRAILER MOUNTING PLATE
A	151-09BCS38114	3/8''-16 X 1.25''LG ZP GR5 CARRIAGE BOLT
B	151-02PZ0006	3/8'' STD ZP WASHER
C	151-05PZ0006	3/8''-16 ZP LOCKNUT
D	151-01QC0029	5/16-18 1 1/4" INOX HEX BOLT
E	151-02QC0005	5/16'' STD S/S WASHER
F	151-05QC0005	5/16''-18 S/S LOCKNUT
G	151-01QC0031	5/16''-18 X 1,75"LG S/S HEX BOLT

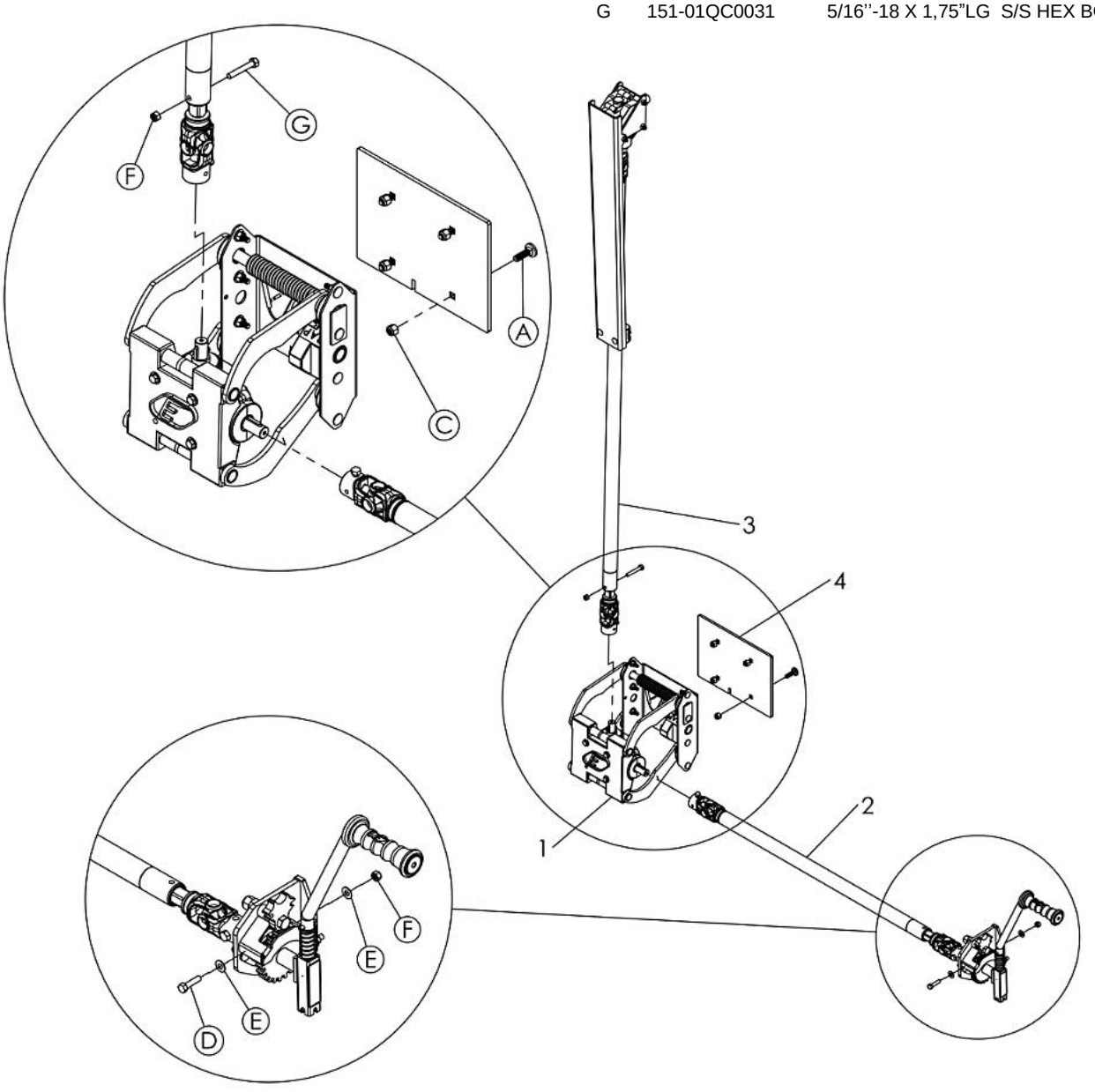

7a. Installation of the central mechanism

NOTE
• Remove any unnecessary objects or components from the operating area (examples: shovel support, broom support, calcium tank, etc.) • Make sure all supporting surfaces are level before installing the mechanism. Sand and cut all detrimental defects. • In some situations, modify the cylinder cage access door in order to increase the supporting surface of the mechanism. • If the interior of the trailer body is not accessible, insert the bolts in the anchoring plate and weld it directly to the exterior of the trailer.

1. **Figure 1.** Find the center of the trailer body and measure 6” downwards from the bottom of the body as shown.
2. Make 2 reference marks

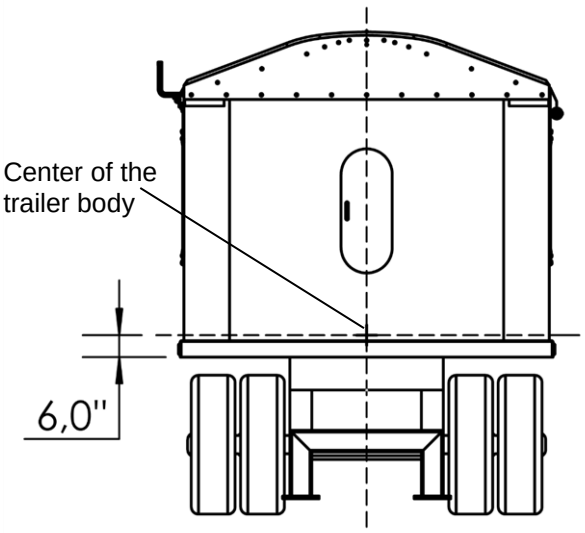

Figure 1

NOTE
• Some trailers do not allow the central mechanism to be installed directly on the front of the trailer. • In such situation, an adaptation part will be required between the trailer and the mechanism. • In some cases the adaptation part will be provided with the system and in some other instances it will need to be customized by the distributor or the trailer manufacturer.

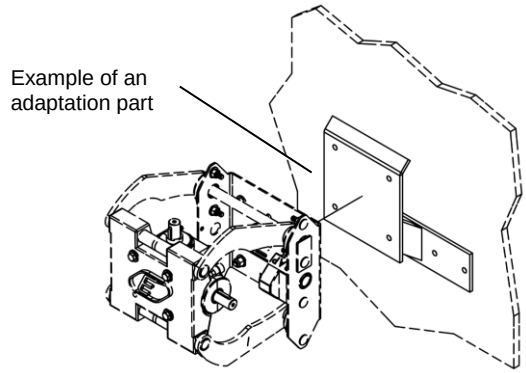

3. **Figure 2**. Use the anchoring plate (4) as the drilling template.
4. Drill four holes through the trailer body.

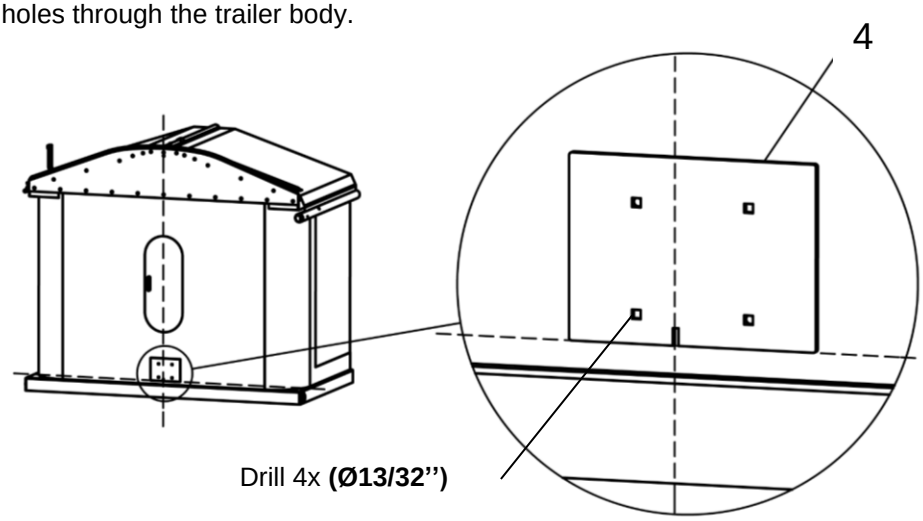

Figure 2

5. **Figure 3.** Insert the anchoring plate (4) and the four bolts (A) into the cylinder cage. Align the bolts with the holes drilled in the previous step.

NOTE
• If the trailer is equipped with a cylinder cage access door, open this door. • If it is not, raise the trailer dump about 12” to introduce the anchoring plate.

WARNING
• Use a safe and appropriate lifting device to raise the body. • Secure the lifted body in place. Introduce a support between the body and the frame.

Advice
• Apply adhesive tape on the bolts heads before inserting the plate.

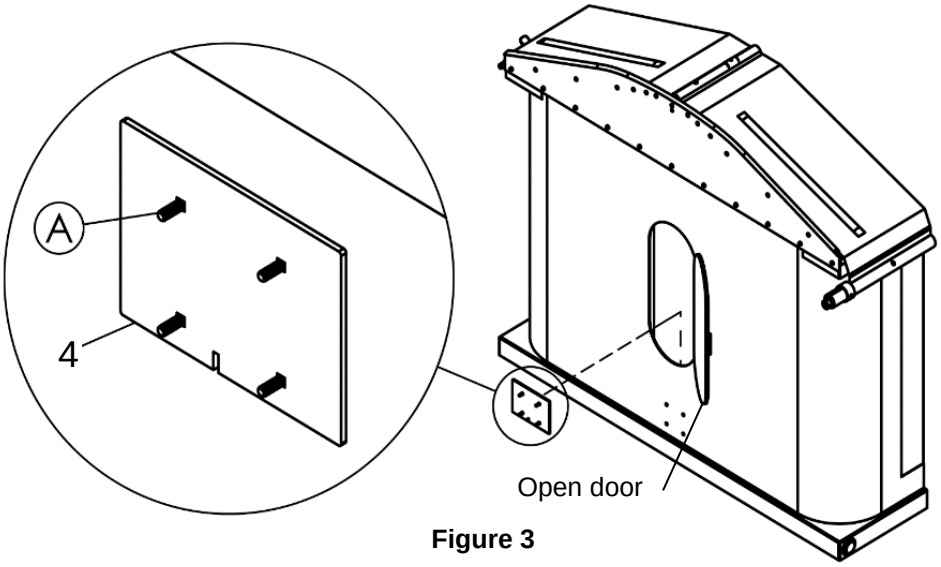

Figure 3

6. **Figure 4.** Align the central mechanism (1) on the bolts and install the washers (B) and the nuts (C). (Hardware kit : **710R0141**)

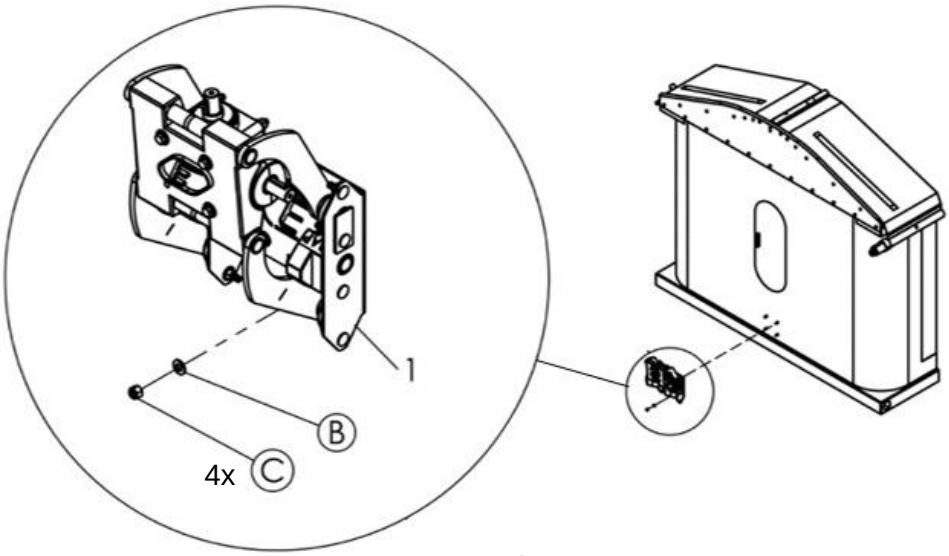

Figure 4

7. Lower the trailer body in a safe manner.

7b. Installation of the complete assembled crank

NOTE
• Verify the installation side of the crank. • The crank is always on the **opposite side** of the fixed side of the tarp.

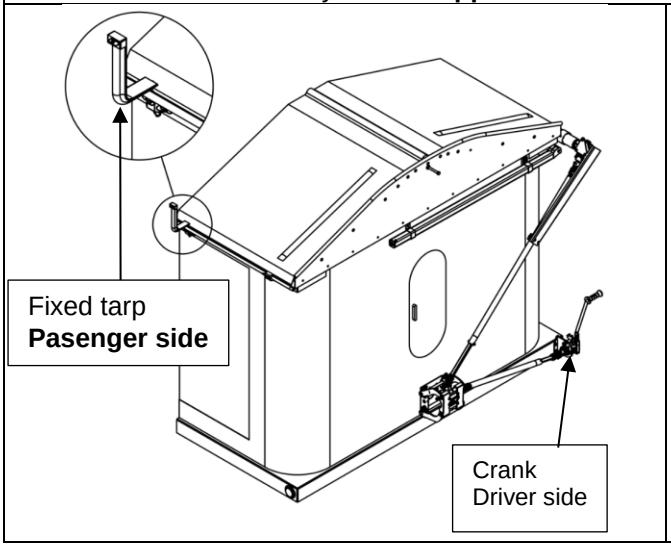

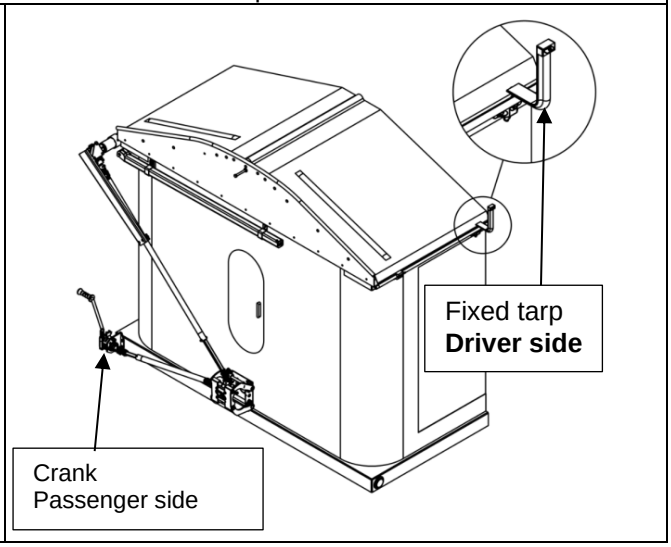

NOTE	
• In some situations it will not be possible to install the crank directly on the trailer body base (examples: not enough space, corner light in the way, interfering accessories, etc.). • In such case, weld the U support (channel), provided with the system, directly on the base. • Some bodies will require the addition of a corner support adapted to the trailer. • In some cases, the support is provided, if not it must be custom-made by the client.	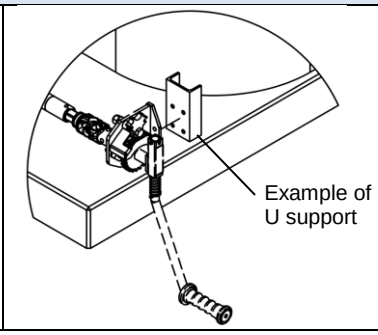

1. **Figure 5.** Temporarily remove the corner light
2. Sand any defects that could be detrimental to the installation of the crank support base.
3. **Figure 6.** Use the template sheet provided at the end of the document as drilling template.
4. Position the crank 1” from the edge
5. Drill four holes at the base of the trailer body.

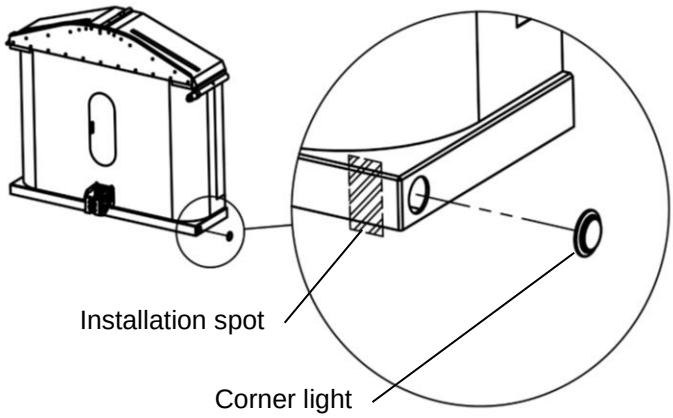

Figure 5

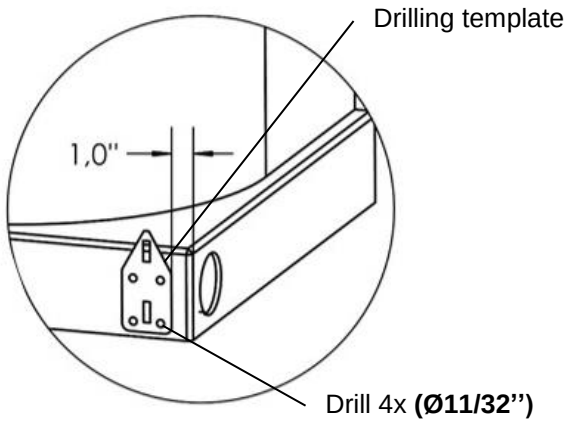

Figure 6

6. **Figure 7.** Apply *Anti-Seize* on the extremity of the gearbox.
7. Connect the crank universal joints (2) to the gearbox.

NOTE
• Ensure the pin is in place.

8. Tighten the set screw.

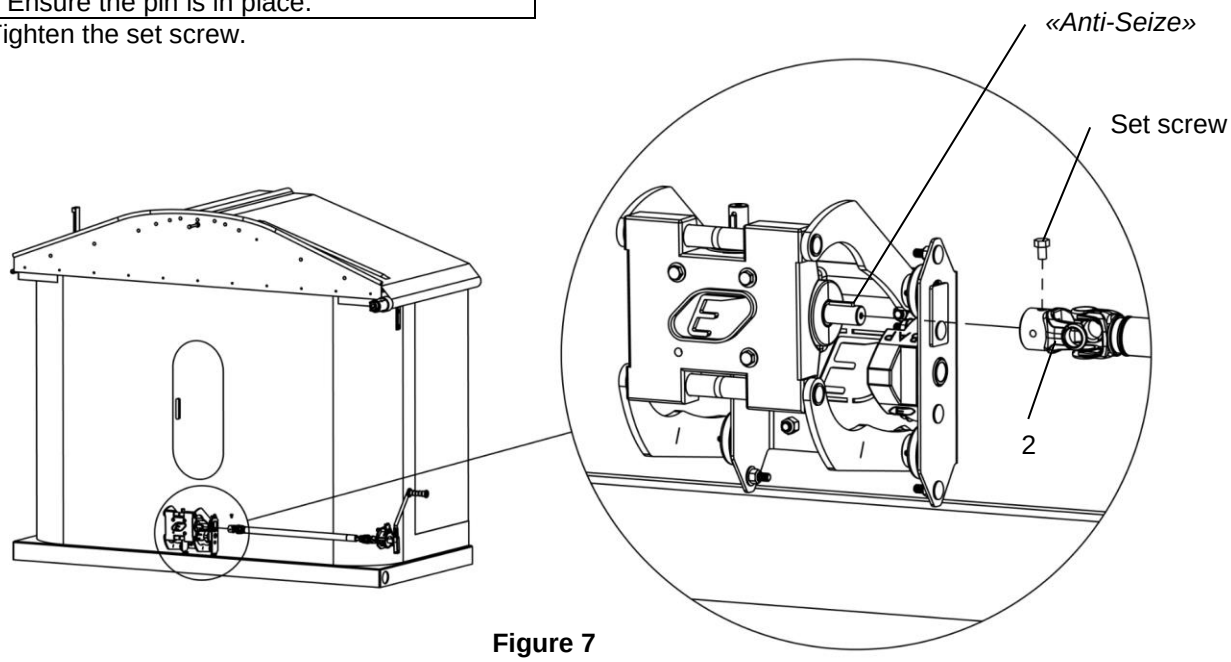

Figure 7

9. **Figure 8.** Align the support with the drilled holes.
10. Install the bolts (D), the washers (E) and the nuts (F).
    (Hardware kit: **710R0142**)

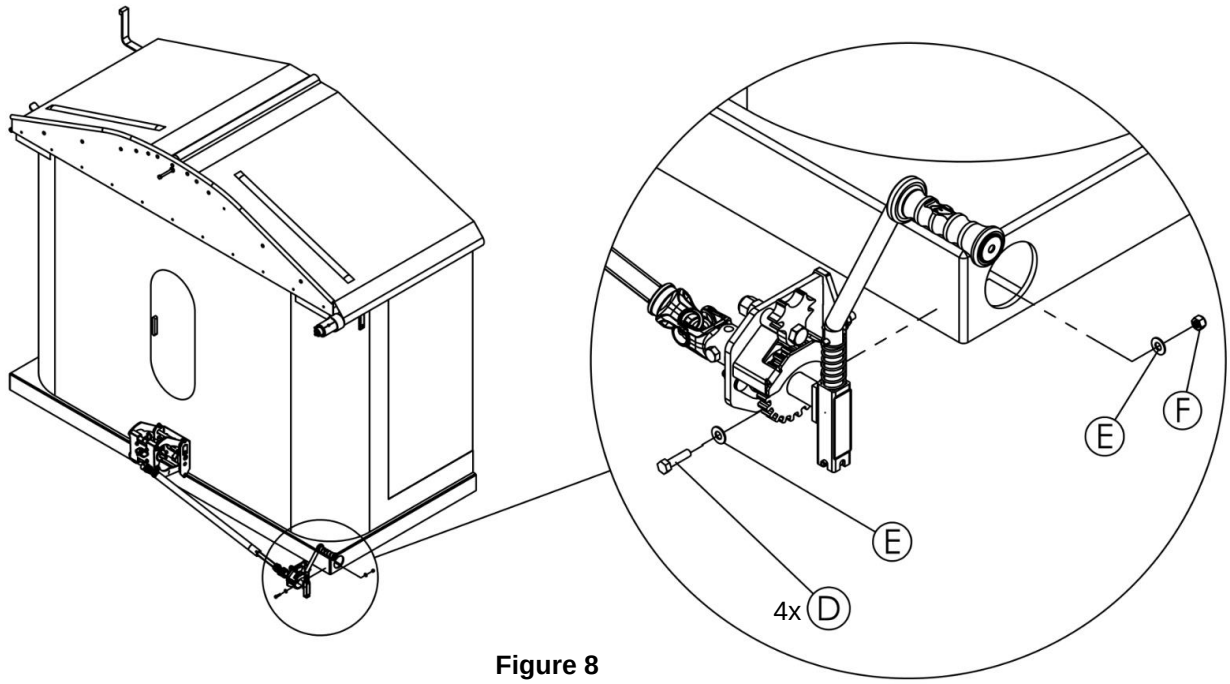

Figure 8

11. Reinstall the corner light.

7c. Installation of the Superior Telescopic Tube

1. **Figure 9**. Apply *Anti-Seize* on the extremity of the central gearbox.
2. Connect the Interior tube (3) to the gearbox.

NOTE
• Ensure the key is in place

3. Tighten the pressure screw.

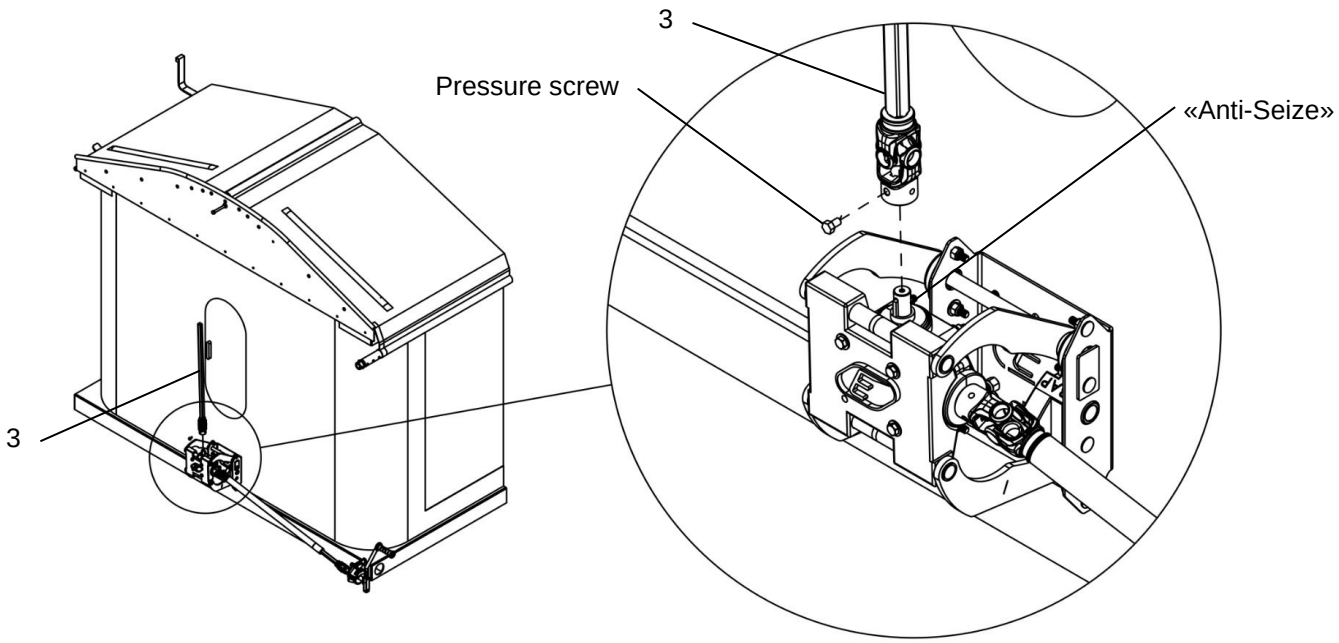

Figure 9

4. **Figure 10.** Apply *Anti-Seize* on the extremity/end of the superior gearbox
5. Install the Superior Telescopic Tube (3) on the Inferior Tube.

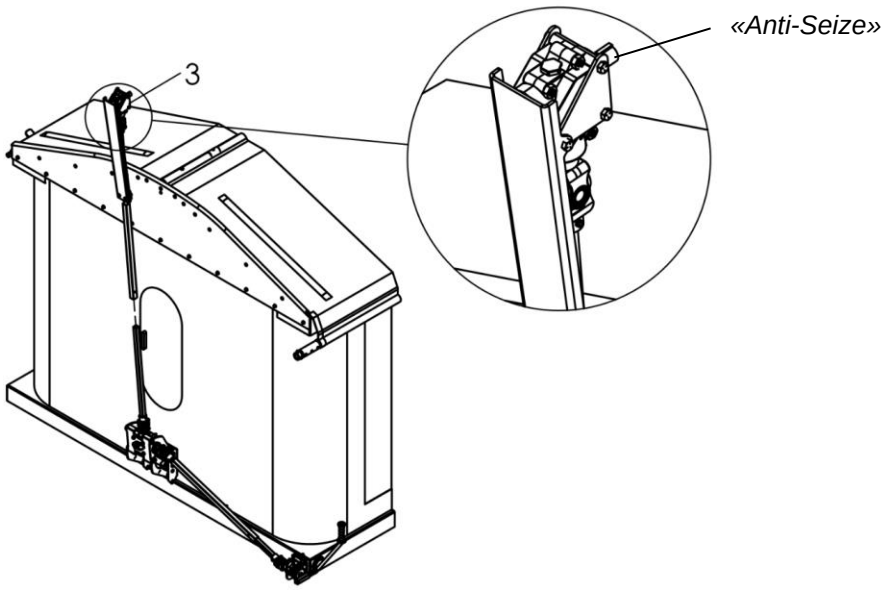

Figure 10

6. **Figure 11.** Connect the extremity/end of the gearbox to the roll pipe.

NOTE
• Ensure the key is in place • Ensure the pressure/SET screw is aligned with the **mark** on the extremity of the gearbox

7. Tighten the two pressure screws

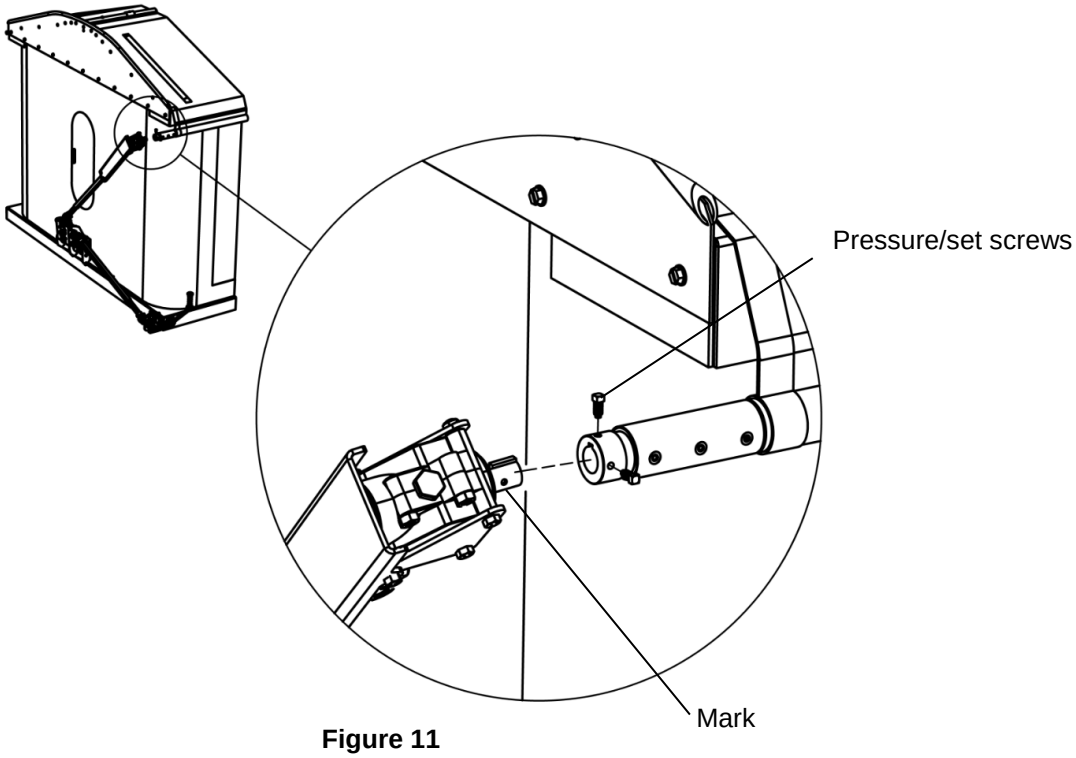

Figure 11

8. **Figure 12.** Operate the system to open the tarp completely.

NOTE
• Two people are required to proceed with the next step. • One person turns the crank. • A second person is in an elevated platform and manually holds the tarp roll while keeping pressure on it. • This manipulation allows to properly roll the tarp and keep it correctly aligned.

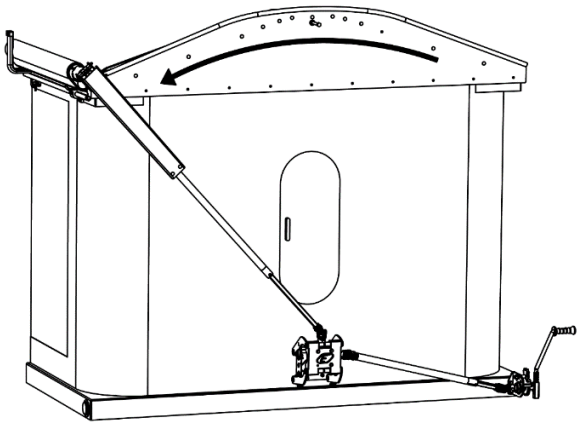

Figure 12

1. **Figure 13.** Push downwards on the pivoting system and leave a gap of **1,0''** between the stop block and the system lever.
2. **Figure 14.** Drill through the interior tube.
3. Install the bolt (G) and the nut (F).

Advice
• Make sure that the drill bit is properly sharpened before starting this operation. • Use cutting oil to ease the drilling step.

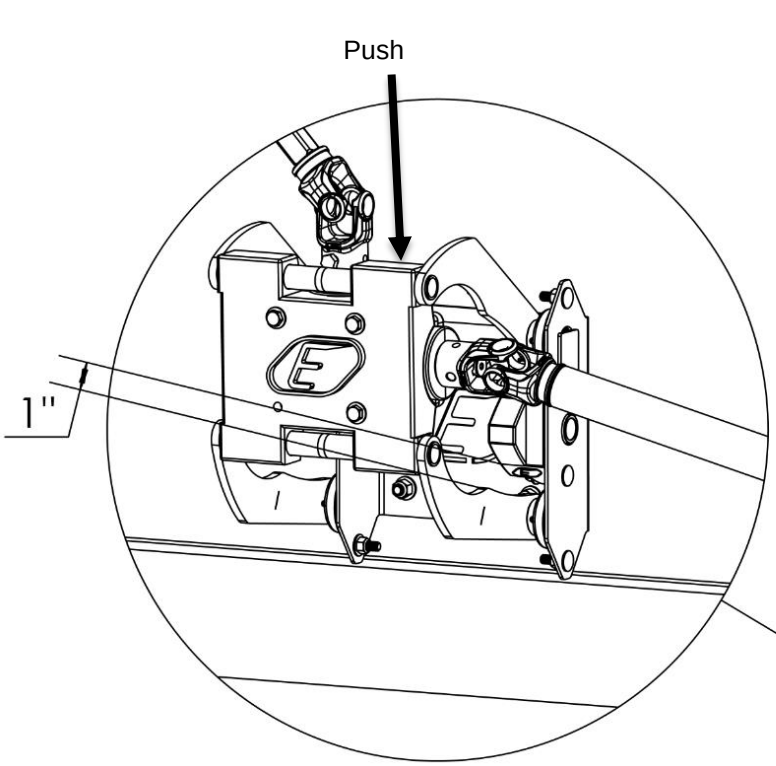

Figure 13

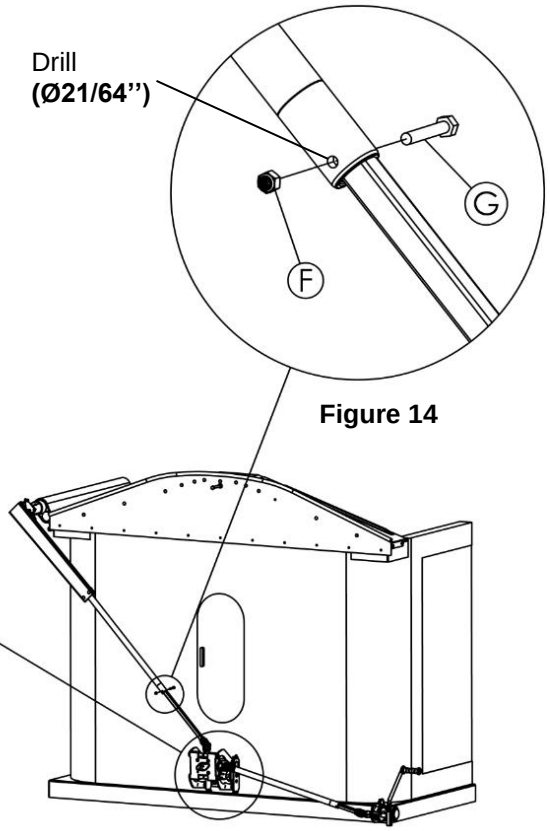

Figure 14

Step 8. Tensioners

Internal

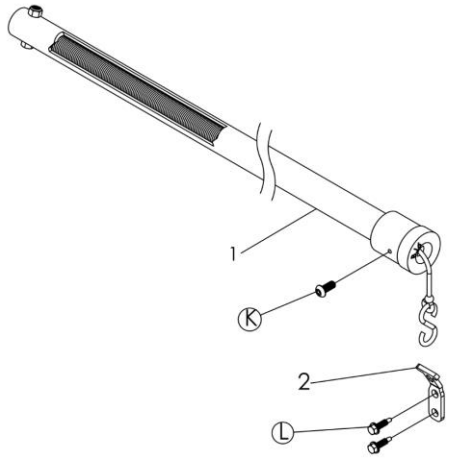

Item	Part #	Description
1	101A1002-BJ2	INTERNAL TENSIONER BJ2
2	101CM1055	TENSIONER & BUNGIES HOOK HOLDER
K	151-09QCTB51634	5/16"-18 X 3/4"LG BUTTON-HEAD SCREW
L	151-07PZ0006	SELFT-DRILLING SCREWS 1/4 X 1"LG ZP

1. **Figure 1.** Install the anchoring plate (2) and the self-drilling screws (L) 13” under the upper rail.
2. Hang the internal tensioner cable.

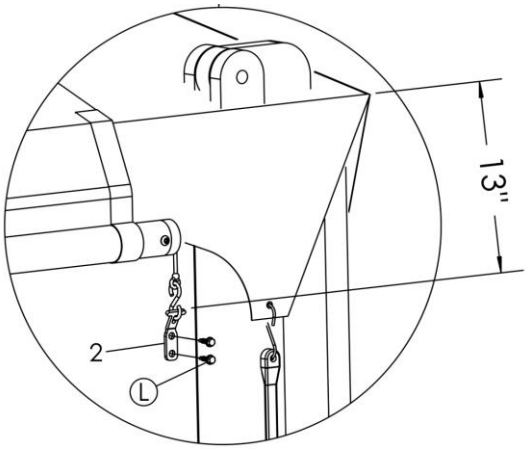

Figure 1

External

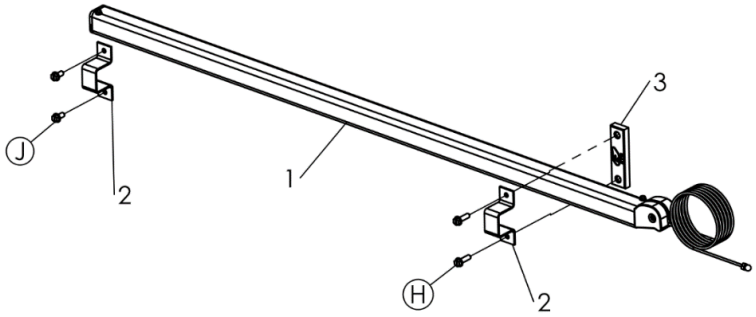

Item	Part #	Description
1	101A1004	60" EXTERNAL TENSIONER SINGLE HEAD
2	101CM1025	EXTERNAL TENSIONER HOLDER
3	141CASTE	EXTERNAL TENSIONER SPACER
H	151-08PZ38112	SMS 3/8" X 1,5"LG ZP
J	151-08PZ0033	SMS 3/8" X 1"LG DT2000

NOTE

- Verify the installation side of the external tensioner.
- The tensioner must always be installed **opposite** the fixed side of the tarp.

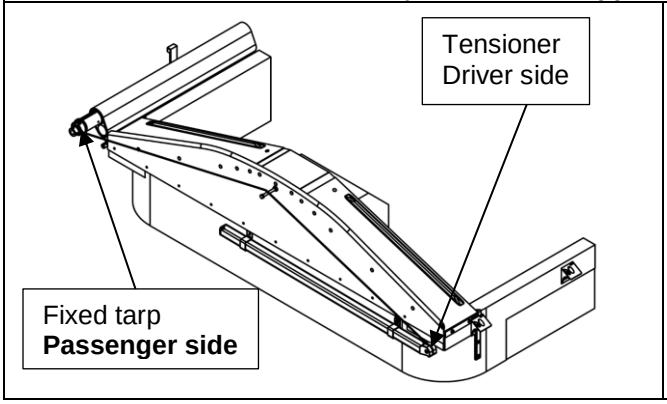

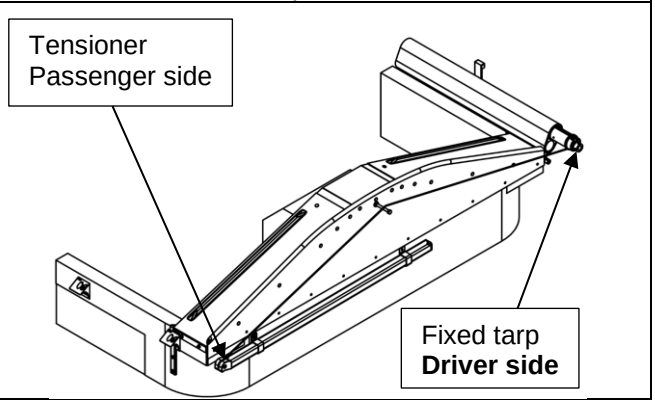

1. Operate the system to open the tarp fully.

NOTE
• Two people are required to proceed with the next step. • One person turns the crank. • A second person is in an elevated platform and manually holds the tarp roll while keeping pressure on it. • This manipulation allows to properly roll the tarp and keep it correctly aligned.

2. **Figure 1.** Position the tensioner head **1’’** away from the exterior wall.
3. Align the tensioner horizontally, **1.5’’** under the anchoring blocks.
4. Position the tensioner supports and drill the four holes.

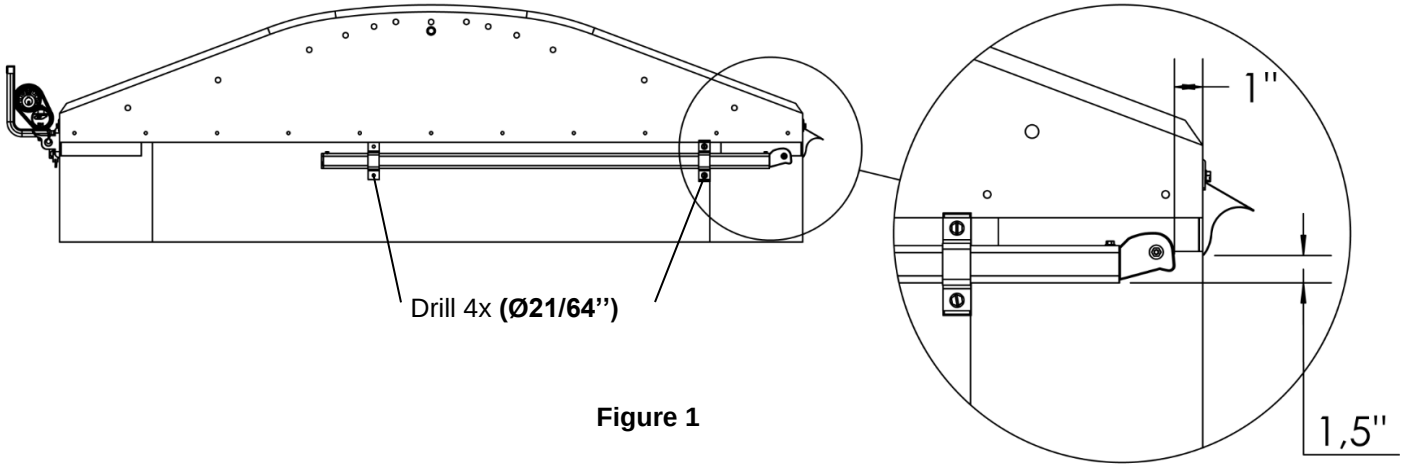

Figure 1

5. **Figure 2**. Install one support (2), the spacer (3) and the long screws (H) to the side of the tensioner head. (Hardware kit: **710R0138**)
6. Install a second support (2) and the short screws (J) to the tensioner extremity.

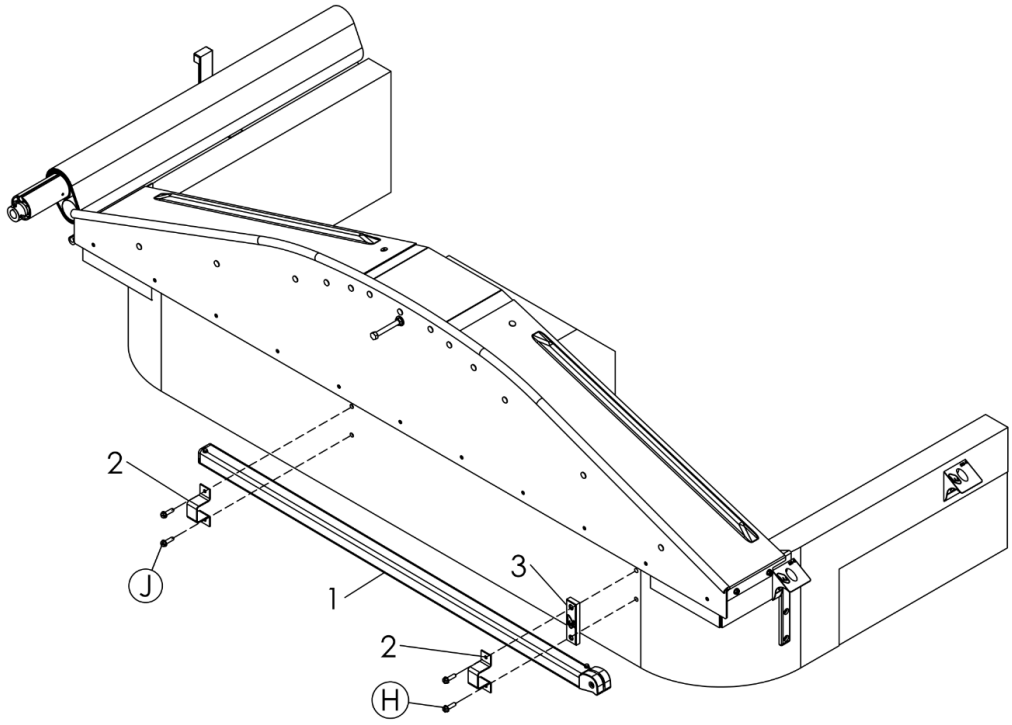

Figure 2

NOTE
• Some trailers do not allow the installation of the external tensioner on the front. • In such situation, the tensioner must be installed on the side of the trailer, as shown on the figures below. • This type of configuration requires the use of a diverter pulley on the corner of the trailer.
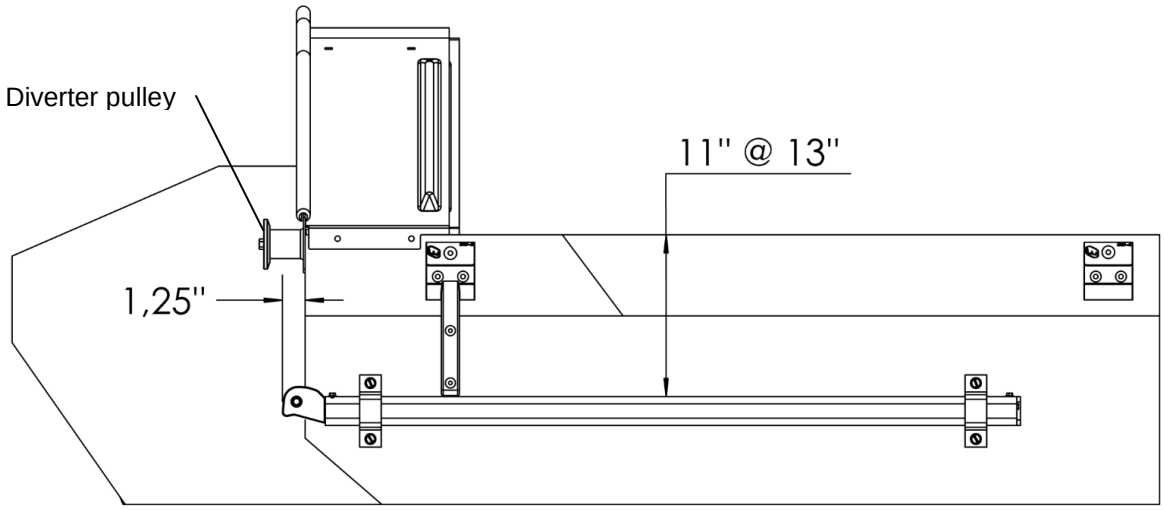
NOTE (suite)
• Install the tensioner (1), the supports (2) and the screws (H) & (J). • Weld the pulley support and install the diverter pulley.
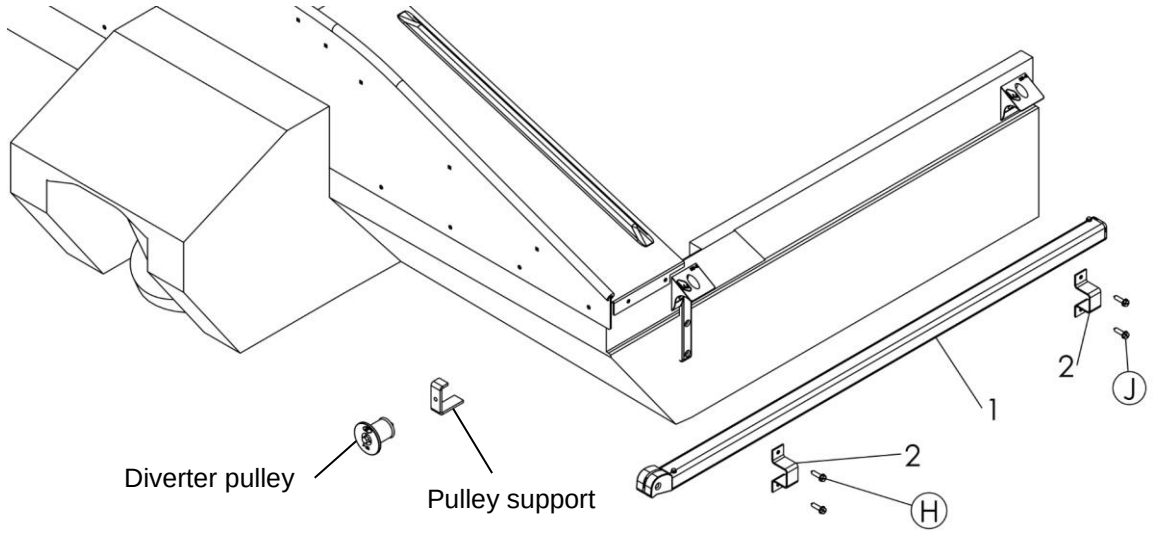

Figure 3. Pull the cable to its **maximum** and install a “vise-grip” to hold the tension.

WARNING
• Ensure that the cable is completely and safely blocked before proceeding to the next steps.

7. Bring the cable over the central bolt.

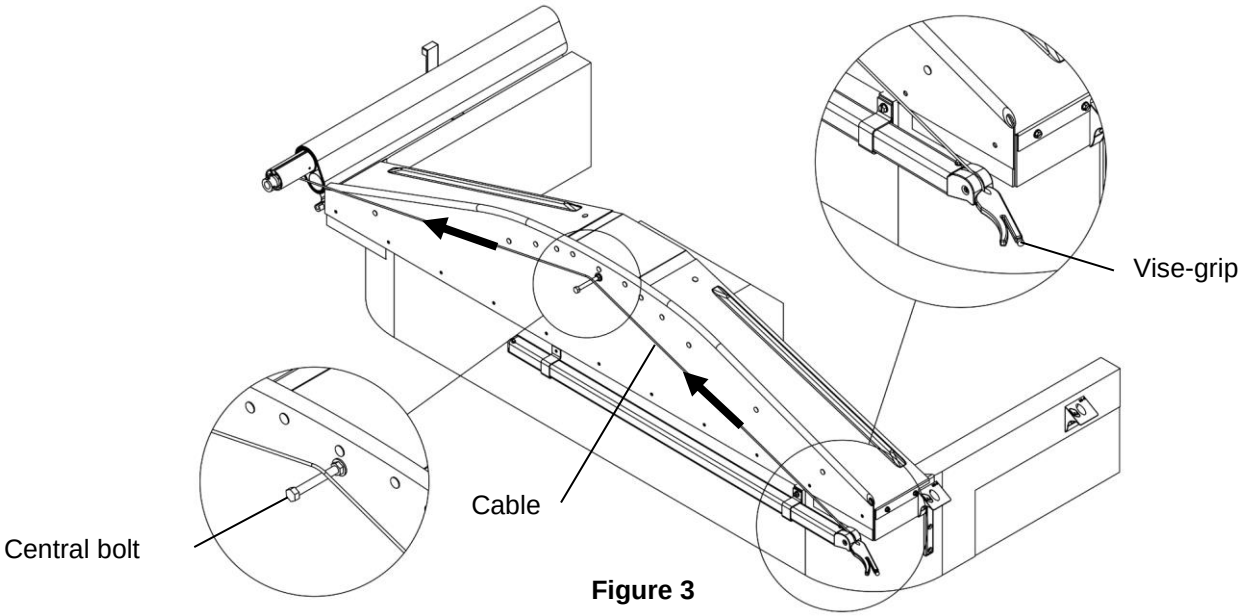

Figure 3

8. **Figure 4.** Slide the cable under the roll pipe and roll the cable around the pipe.

NOTICE
• Always make sure the cable stays under the roll pipe • The cable must be installed 1” from the extremity and must be rolled from the exterior towards the interior.

9. **Figure 5.** Insert the nut and the knot into the groove of the roll pipe, 1" from the edge.

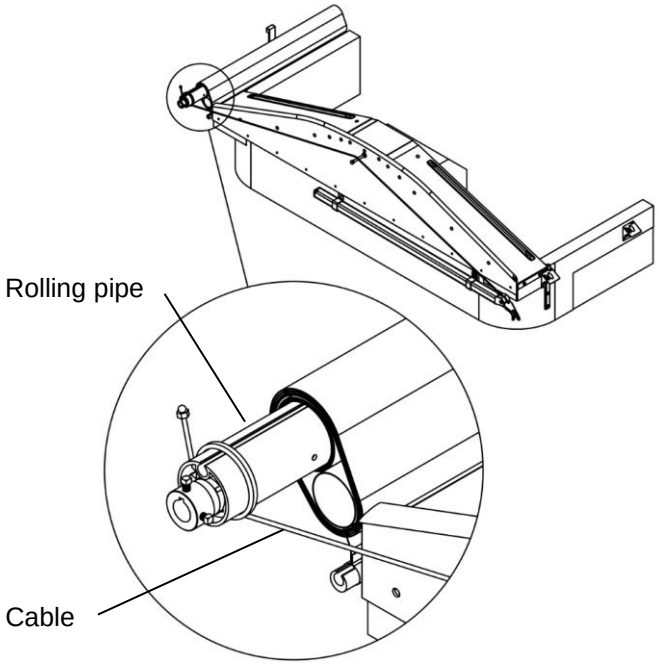

Figure 4

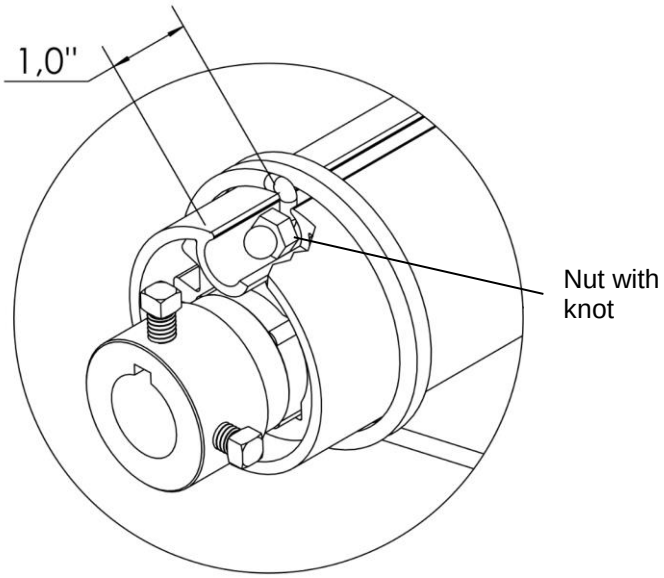

Figure 5

10. Remove the vise-grip safely.

Step 9. Final adjustments

9a. Central cross-bows

1. Go inside the trailer body
2. Ensure the tarp is fully closed and anchored
3. **Figure 1.** Position yourself under the central cross-bows and push vertically under the cross-bow union to extend the tarp.
4. Using a marker, mark the location of the union joint.

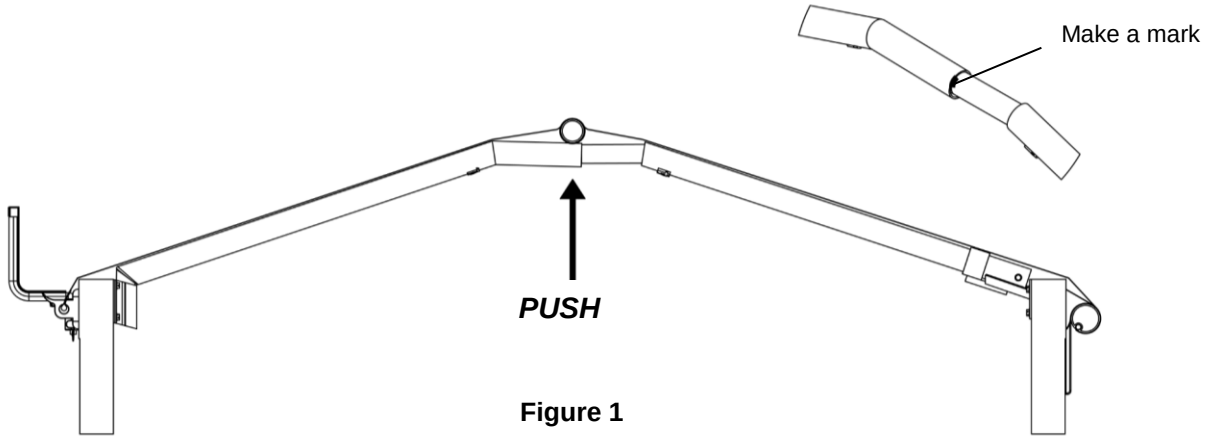

Figure 1

5. Open the tarp and remove the cross-bows.
6. **Figures 2.** Put the cross-bows flat on the ground and position the mark ½" outside the union joint.

NOTE
• This additional ½" allows for perfect adjustment of the tension of the tarp

7. Weld the union joint.

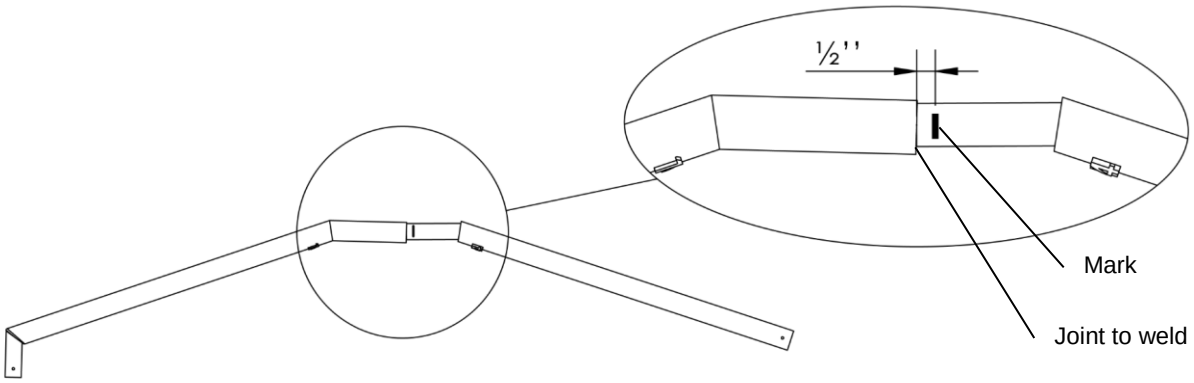

Figure 2

8. Install the cross-bows back in place
9. Close the tarp and verify the tension on the tarp.
10. If the tension of the tarp is not adequate, adjust the cross-bows' height using a hydraulic press.

9b. Central pipe

1. Close and anchor the tarp
2. Make sure the connector of the central pipe is perfectly leaning against the front cap.
3. **Figure 1.** Pull on the tarp and install the U shape claw/cover 12” from the edge of the tarp.

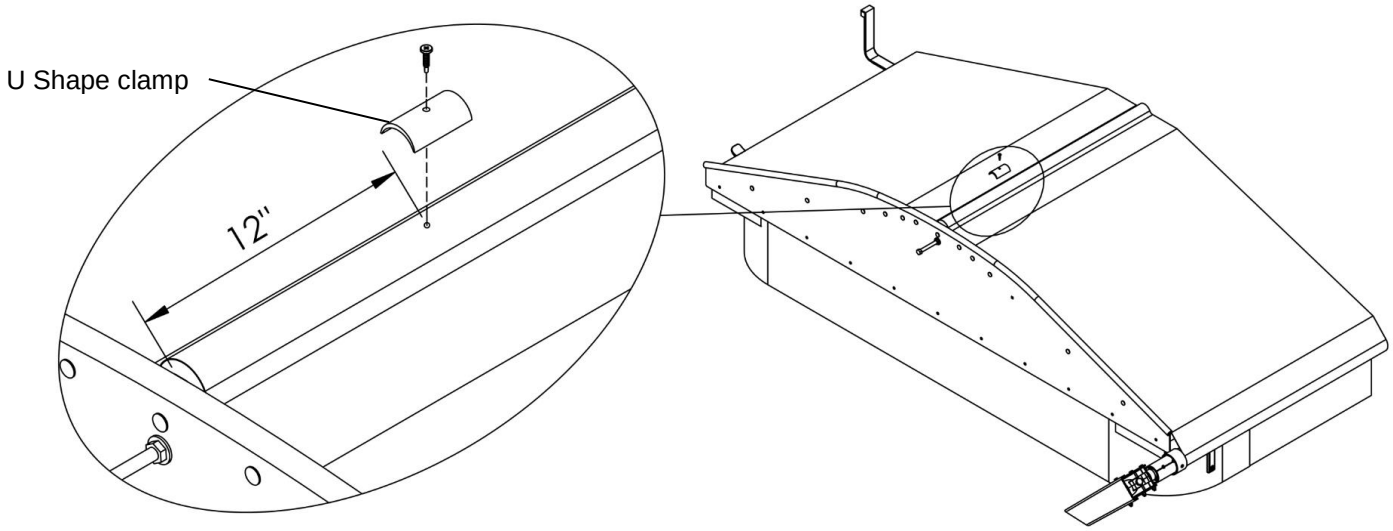

Figure 1

4. **Figure 2.** Going to the rear of the trailer, extend the tarp and install the blocking screw inside the connector of the rolling pipe.
5. Install the U shape claw/cover 12” from the edge of the tarp.

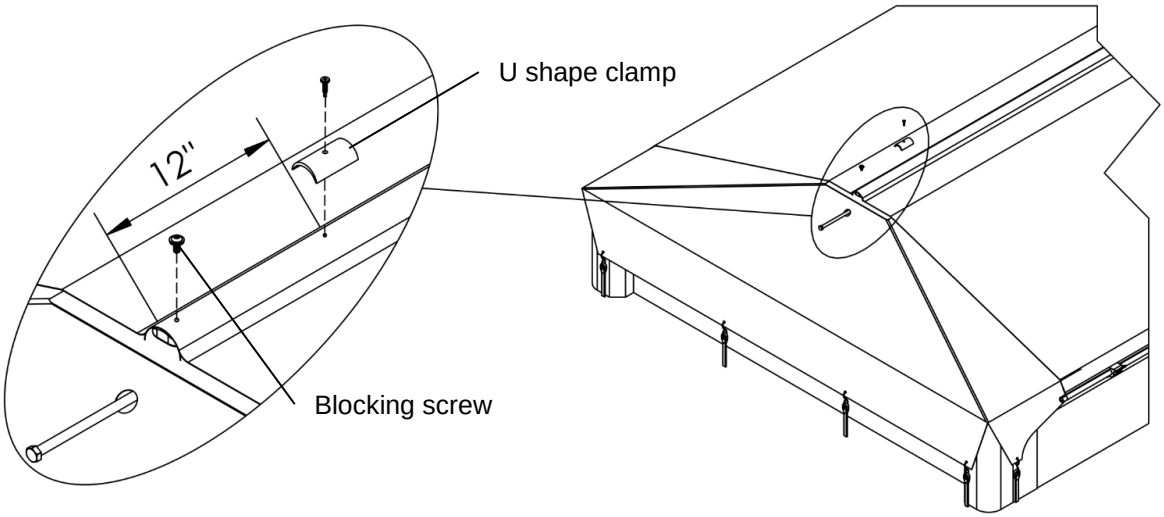

Figure 2

9c Pull Crank

1. Close the tarp and anchor the roll pipe securely in the anchoring blocks.
2. Verify the position of the crank

NOTE	
• The crank must always be positioned in the superior zone of the trailer body, oriented inwards, when the tarp is anchored into the anchoring blocks. • If the crank is not properly positioned, adjust using the following procedure :	
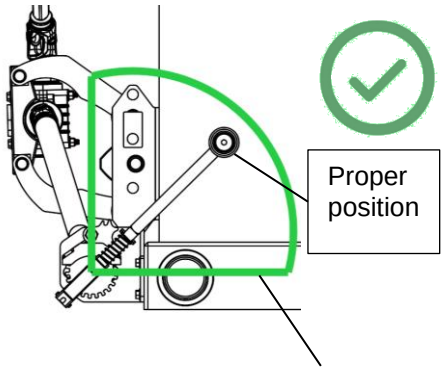	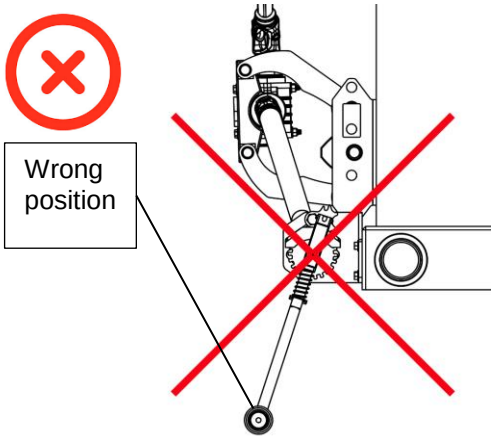

3. Disengage the tarp from the anchoring blocks.
4. **Figure 1.** Remove the nut and the bolts at the crank base.
5. Turn the crank with 90º increments to reach the desired position.

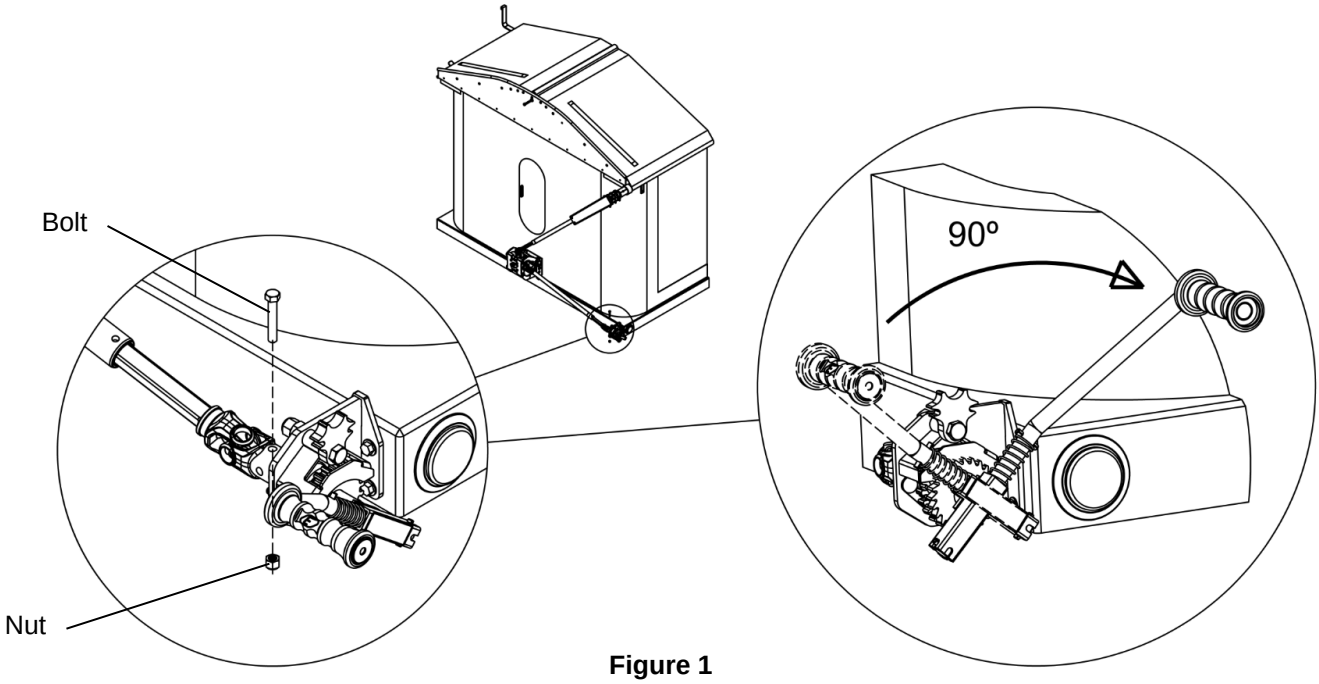

Figure 1

6. Re-install back the locking bolt and the nut.
7. Validate that the new crank position is adequate

9d. Installation of the logos/stickers/decals

1. **Figure 1.** Apply the identification labels for the cross-bows on both sides of the trailer, in line with the central cross-bows.

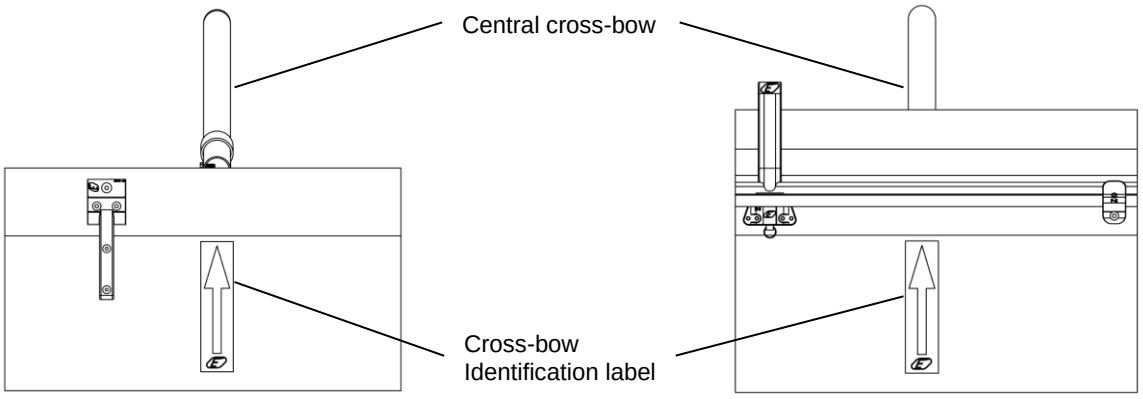

Figure 1

2. **Figure 2.** Apply product logos at the upper front and rear corners of the trailer, on the driver side, as shown below.

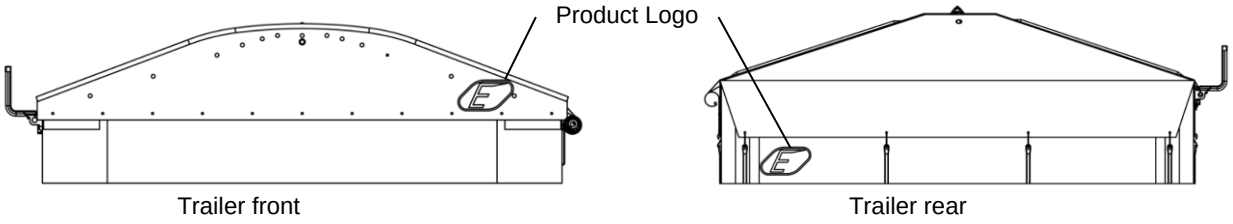

Figure 2

3. **Figure 3.** Apply product logos at the front of the trailer, on each side, as sown :

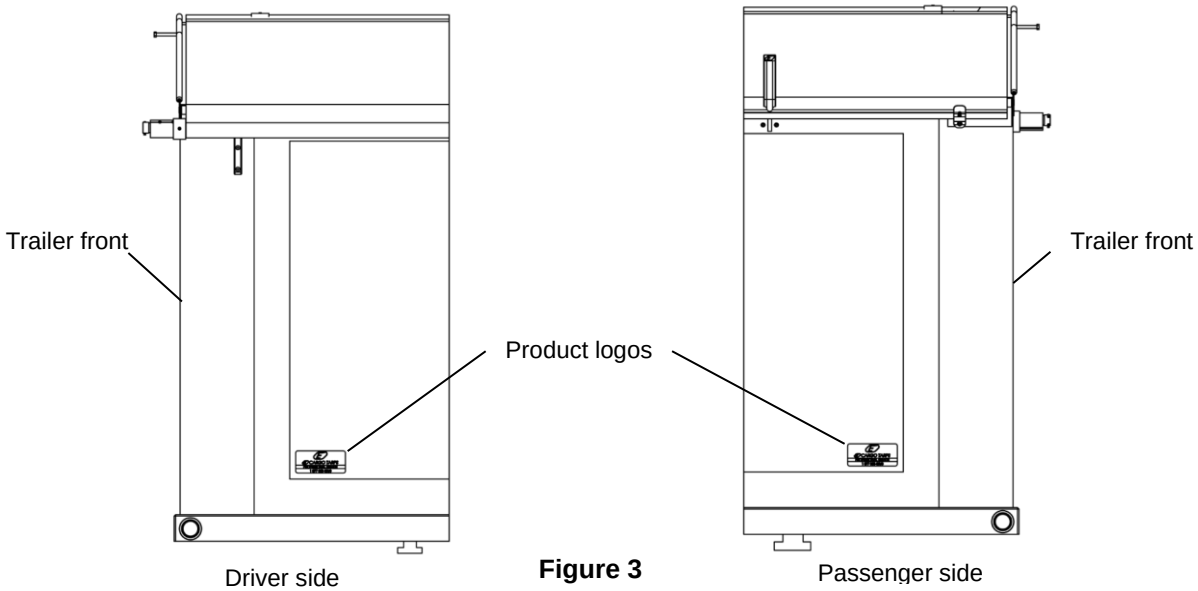

Figure 3

Step 10. Final inspection

Fill out the final inspection form in appendix at the end of the document.

System usage

1. **Figure 1.** Pivot the crank 90° to make it functional.

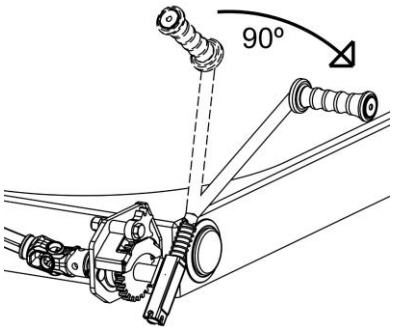

Figure 1

2. **Figure 2.** Grab the crank and operate the system to open and close the tarp.

WARNING

- Adopt a wide and stable position on the ground.
- Keep shoulders perpendicular to the trailer
- Hold the crank firmly and pivot.
- Never release the crank while operating the system.
- Always keep eye contact with the tarp rolling pipe while operating the system.
- Never climb on the mechanism components.
- Never operate the system while the trailer is in movement.

Non-complying with those warnings can induce damage and/or serious injuries

Figure 2

3. **Figure 3.** As the tarp reaches the end of its course, apply a force of 75-100 lbs on the crank to anchor the tarp firmly in place.
4. Make sure the latch is well engaged to block the rotation of the crank while securing the system.
5. **Figure 4.** Pivot the crank 90° to free up the space.

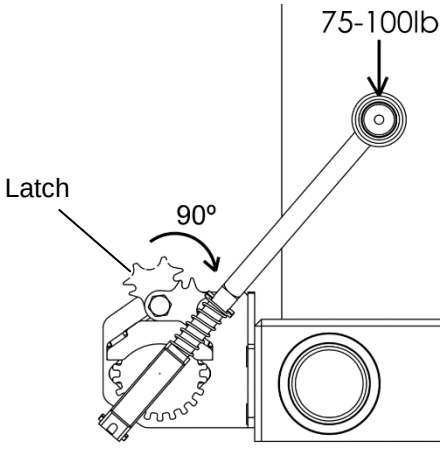

Figure 3

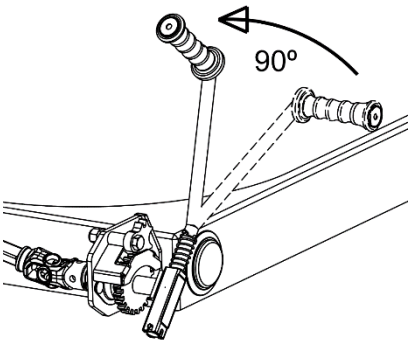

Figure 4

System Maintenance

NOTICE
• Replace all used or damaged parts immediately. • All repairs must be performed as per the appropriate instructions. Replacement parts and instructions can be obtained from your *Elcargo* distributor or by contacting *Elcargo Fabrication Inc.*

NOTE
• The non-compliance with any system maintenance will void all warranties of the system.

General:
Daily
- Look at the general condition of the system and ensure all components are not too used or damaged (tore, cracked, dented, bent).

Tarp:
Daily
- Inspect wear and tear of the tarp.

Anchoring Hardware:
Daily
- Ensure all screws and bolts are in place and well tightened.

Bearings and universal joints
Monthly
- Ensure they turn freely with no excessive operating gaps.
- **Lubricate** the bearings with penetrating oil.
- **Grease** the universal joints.

Horizontal Telescopic Tube:
Monthly
- Make sure it slides easily and does not get stuck or seize.
- **Grease** the sliding junction.

Springs and Tensioners
Monthly
- Make sure all springs are in good shape and function normally.
- Verify that cables are not frayed or are about to break.

Replacing cables and springs

External tensioner.

1. Operate the system to open the tarp fully.

NOTE
• Two people are required to proceed with the next step. • One person turns the crank. • A second person is in an elevated platform and manually holds the tarp roll while keeping pressure on it. • This manipulation allows to properly roll the tarp and keep it correctly aligned.

2. **Figure 1.** Remove the blocking screw, the TA2 connector, the pin and take the spring out of the tensioner.

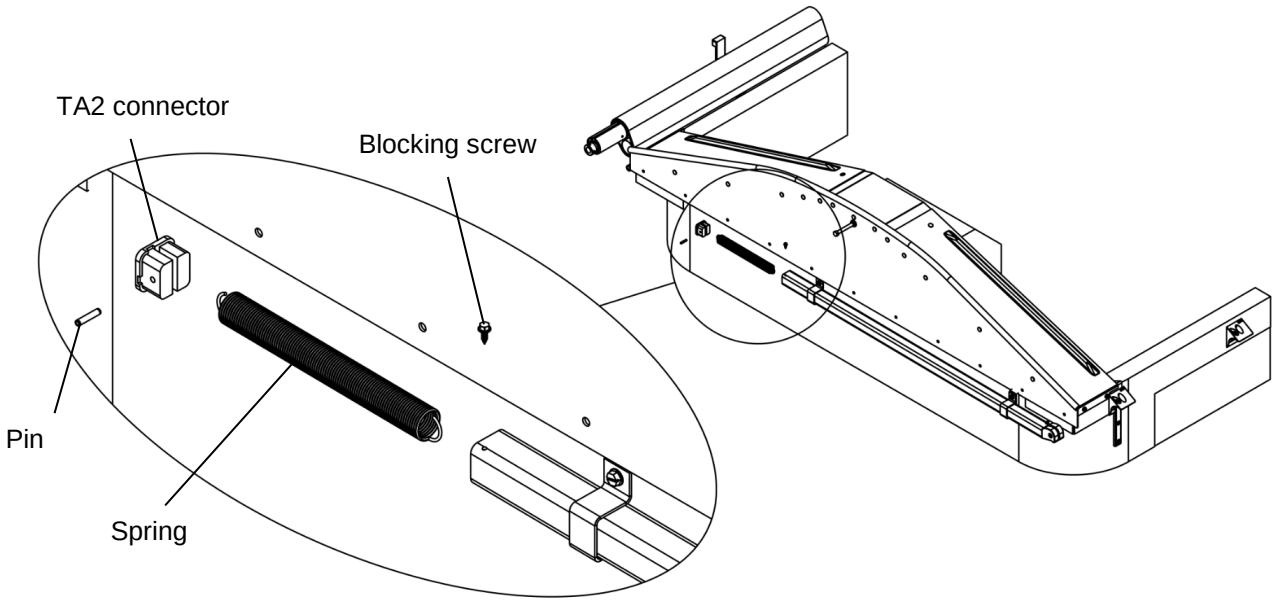

Figure 1

3. Diagnose the issue and verify the items listed below.

To verify

1. Cable 12' long • If cable is shorter it indicates it is damaged or cut.	**2. End node attached to spring** • Is the knot undone? • If yes: refer to figure 2 to know how to attach it back to the spring.
3. Spring ends • Are the spring hooks broken? • Is the space between the hook and the remainder of the spring open, therefore allowing the node to slide?	**4. End node attached to the rolling pipe** • Validate the presence of the node • Validate the presence of the nut
5. Pulley • Verify that the pulley is not stuck/seized or damaged, which would affect the proper functioning of the tensioner.	**6. Polyurethane TA2 connector** • Are the spring hooks broken? • Is the retention pin broken?

4. Replace any damaged or broken parts.

5. **Figure 2.** Insert the cord between the pin and the pulley from the tensioner head and attach the spring cable by making a sliding knot.

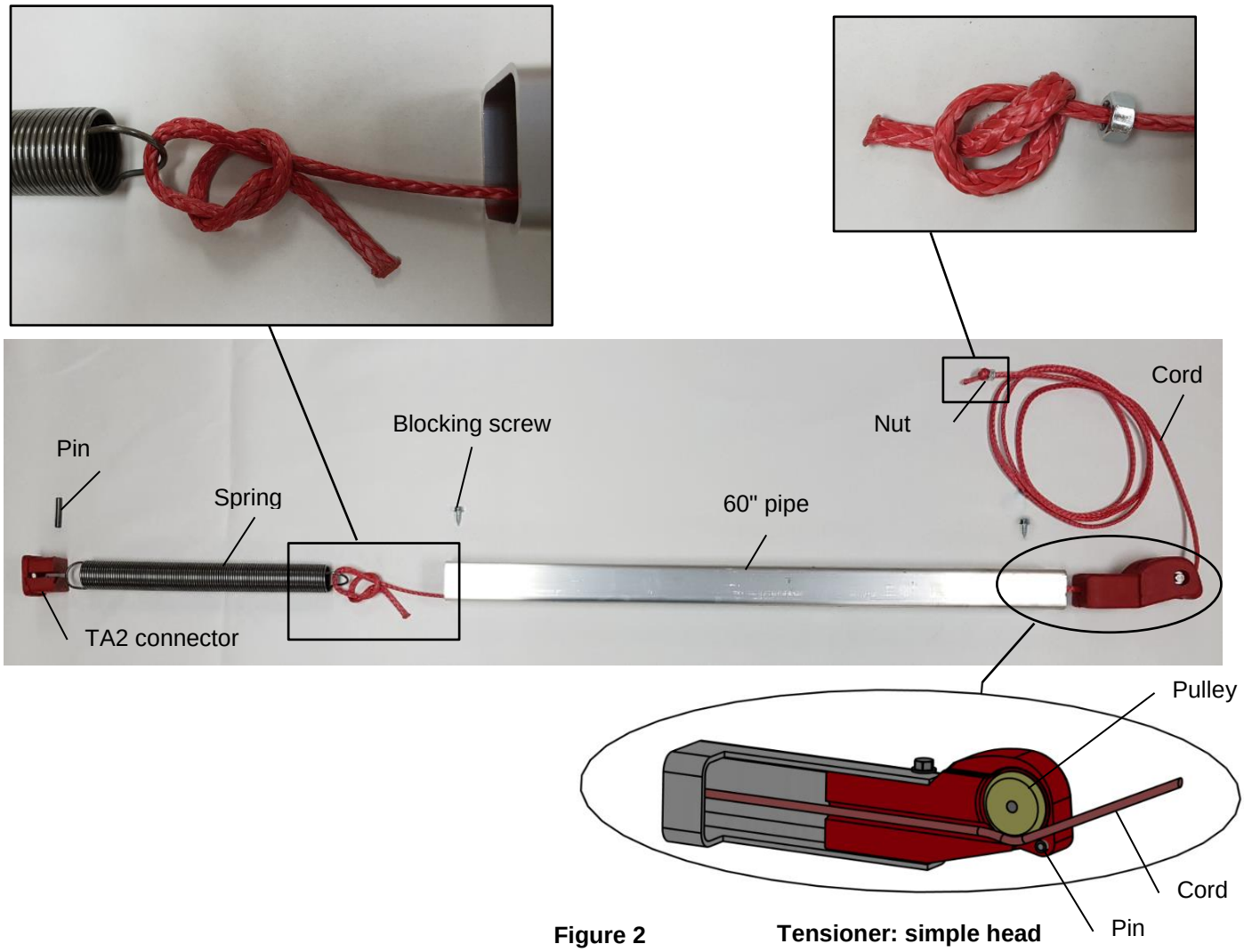

Figure 2 **Tensioner: simple head**

NOTE
• If the tensioner consists of a **double head**, insert the cord between the two pulleys.

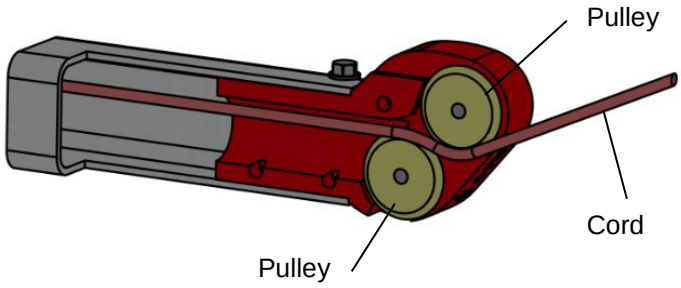

6. Put the pin back into the TA2 connector and the spring back inside the tensioner.
7. Install the blocking screw.

8. **Figure 3.** Pull the cable to its **maximum** and install a “vise-grip” to hold the tension.

WARNING
• Ensure that the cable is completely and safely blocked before proceeding to the next steps.

1. Bring the cable over the central bolt.

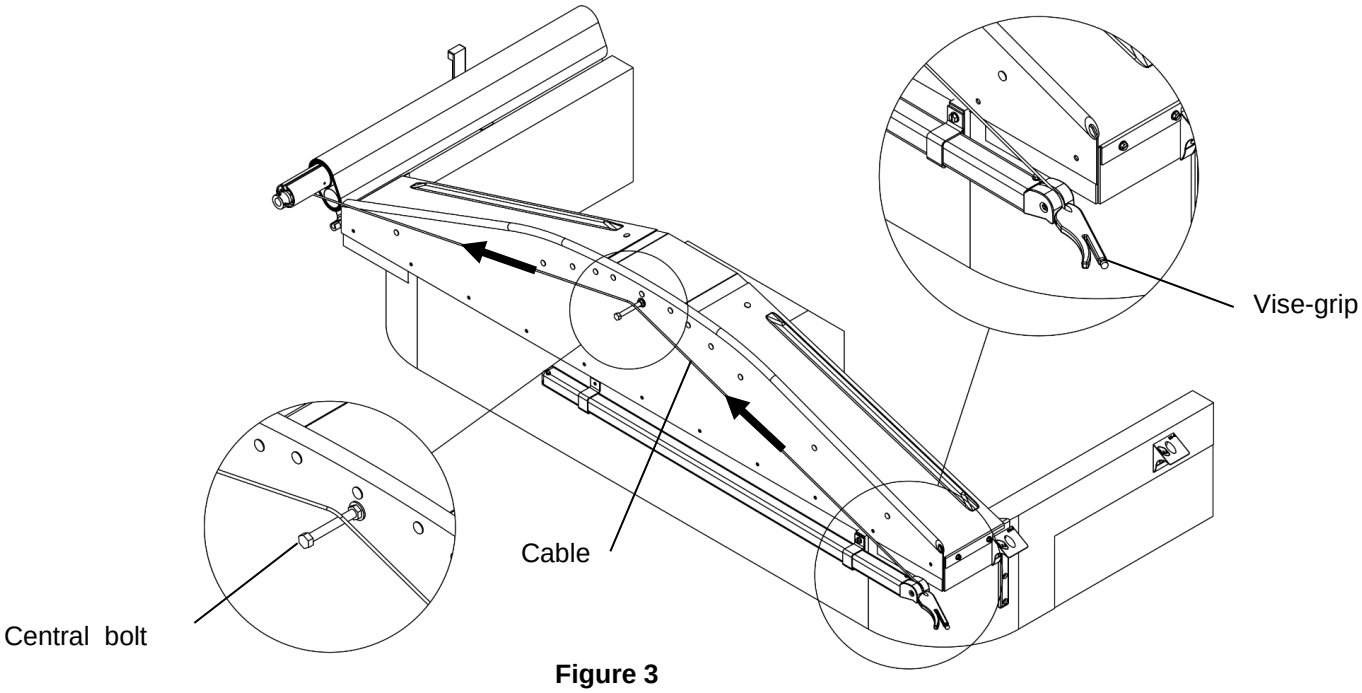

Figure 3

2. **Figure 4.** Slide the cable under the roll pipe and roll the cable around the pipe.

NOTICE
• Always make sure the cable stays under the roll pipe • The cable must be installed 1” from the extremity and must be rolled from the exterior towards the interior.

3. Insert the nut and the knot, into the groove of the roll pipe, 1" from the edge.

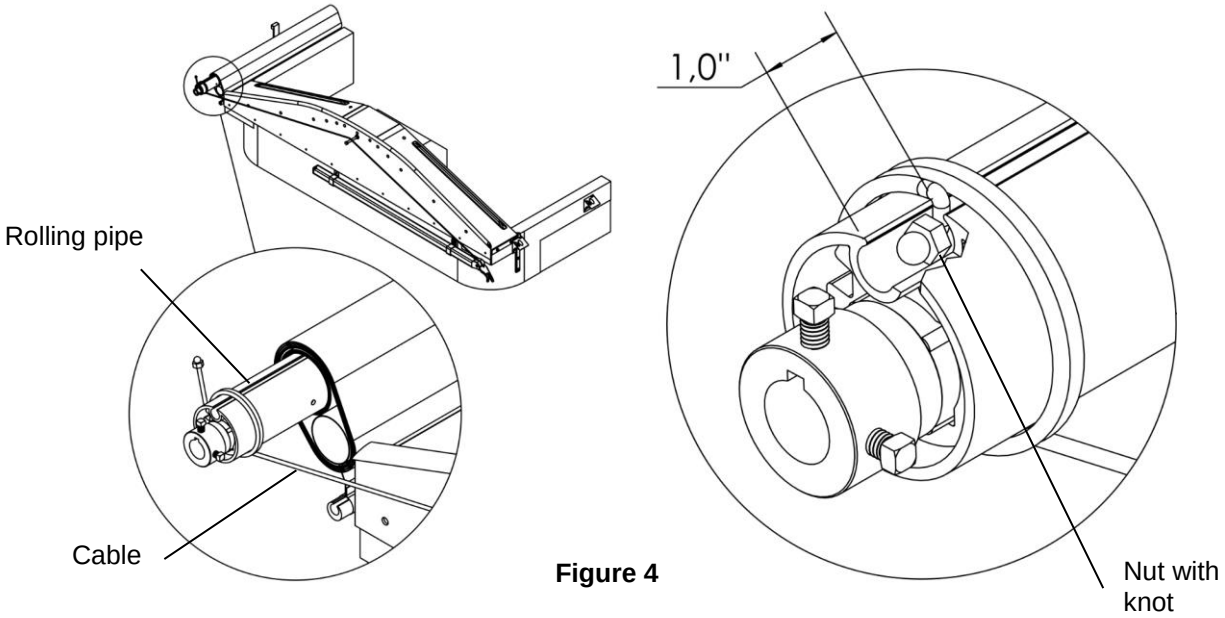

Figure 4

4. Remove the Vise-Grip safely.

Internal Tensioner

1. Ensure the tarp is closed without being anchored into the anchoring blocks.
2. Remove the hook from the mounting plate screwed on the trailer body.
3. **Figure 5.** Unscrew the locking screw and remove the internal tensioner from the roll pipe

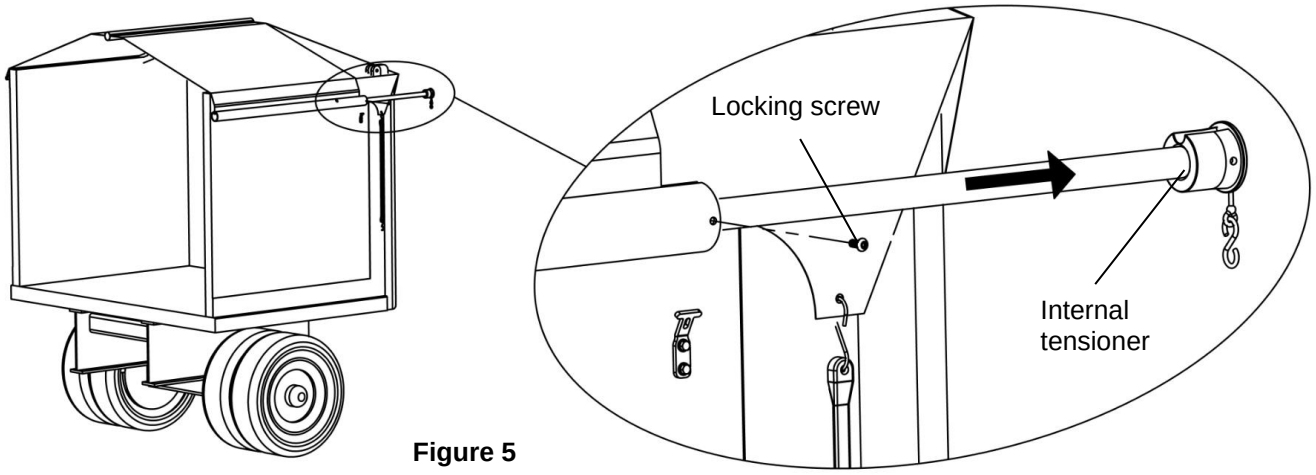

Figure 5

4. **Figure 6.** Remove the nut and the bolt on the extremity of the tensioner.
5. Remove the tensioner head and the spring.

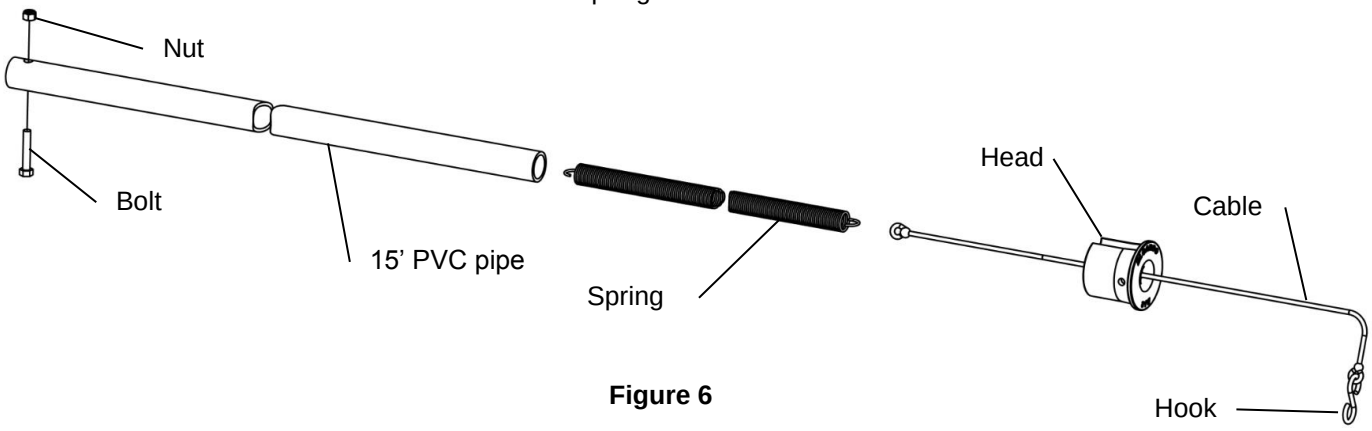

Figure 6

6. Diagnose any issue and verify the following items :

To verify

1. Cable 11'-6'' long • If cable is shorter it indicates it is damaged or cut.	**2. End node attached to spring** • Is the knot undone? • If yes: refer to figure 2 to know how to attach it back to the spring.
3. Spring ends • Are the spring hooks broken? • Is the space between the hook and the remainder of the spring open, therefore allowing the knot to slide?	**4. End node attached to hook** • Validate the presence of the node • Verify the condition of the hook
5. PVC pipe • Verify the general condition of the PVC pipe • Is the PVC pipe cracked or broken?	

7. Replace any damaged or broken parts.
8. **Figure 7.** Attach the cord to the spring by making a sliding knot.

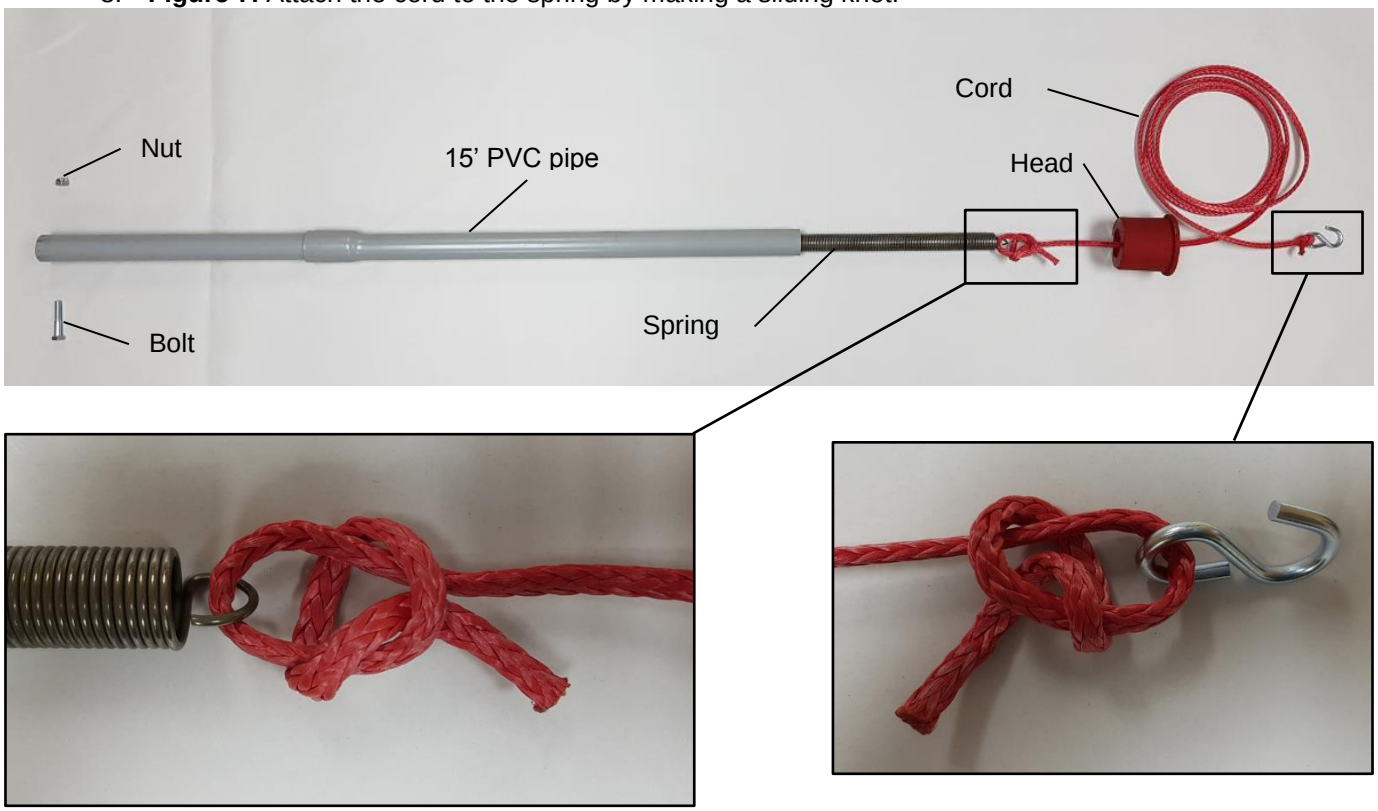

Figure 7

9. Insert the spring and the cord into the PVC pipe.
10. Install the tensioner head
11. Put back the bolt and nut at the other end and ensure the spring is well hooked.
12. **Figure 8.** Insert the tensioner (1) into the rolling pipe.

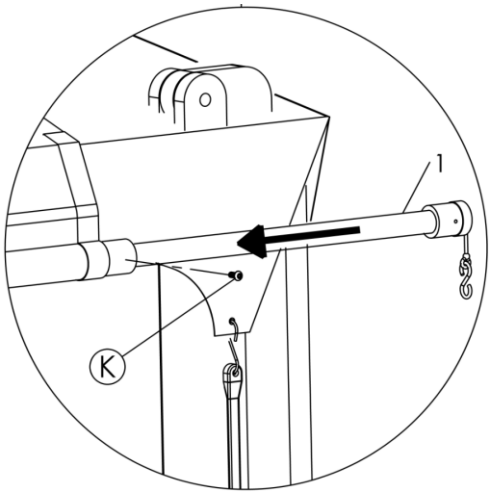

Figure 8

13. Install the blocking screw (K).
14. Hang the hook to the anchoring plate screwed on the trailer body.

Replacement parts

Central Mechanism

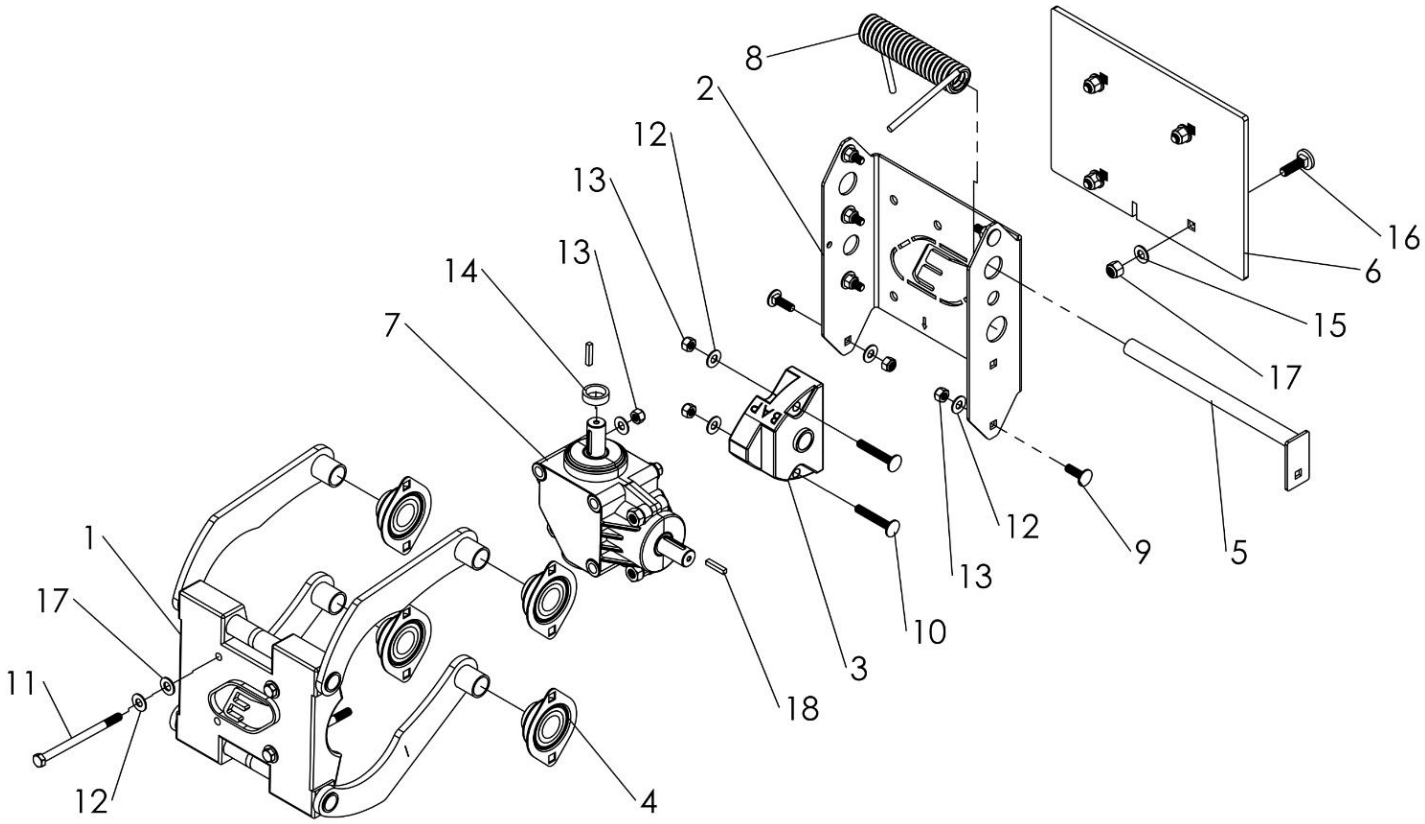

421A0002-C PIVOTING CENTRAL MECHANISM **DRIVER SIDE**
421A0002-P PIVOTING CENTRAL MECHANISM **PASSENGER SIDE**

Item	# Part	Description	Qty
1	421SA0007	PIVOTING POLYURETHANE PLATE	1
2	421CM0005	BEARING MOUNTING PLATE	1
3	141CABAP-1	PIVOTING STOP	1
4	151CA2072	1'' SHEET METAL FLANGE BEARING	4
5	421SA0004	SPRING HOLDER	1
6	421CM0010-R1	TRAILER MOUNTING PLATE	1
7	151CA1010	GEAR BOX L150A 1:1 (3/4" X 3/4")	1
8	101CA1031-P	TORSION SPRING	1
9	151-09QCBC5161	5/16'' X 1''LG S/S CARRIAGE BOLT	6
10	151-09QCBC5162	5/16'' X 2''LG S/S CARRIAGE BOLT	2
11	151-01QC0042	5/16''-18 X 4.5''LG S/S HEX BOLT	3
12	151-02QC0005	5/16'' STD S/S WASHER	14
13	151-05QC0005	5/16''-18 S/S LOCKNUT	11
14	141CABUSH	UNIVERSAL JOINT SPACER	1
15	151-02PZ0006	3/8'' STD ZP WASHER	4
16	151-09BCS38114	3/8''-16 X 1.25''LG ZP GR5 CARRIAGE BOLT	4
17	151-05PZ0006	3/8''-16 ZP LOCKNUT	4
18	101CM1057-1	3/16'' SQUARE KEY 1LG''	2

Assembled crank GEN 1

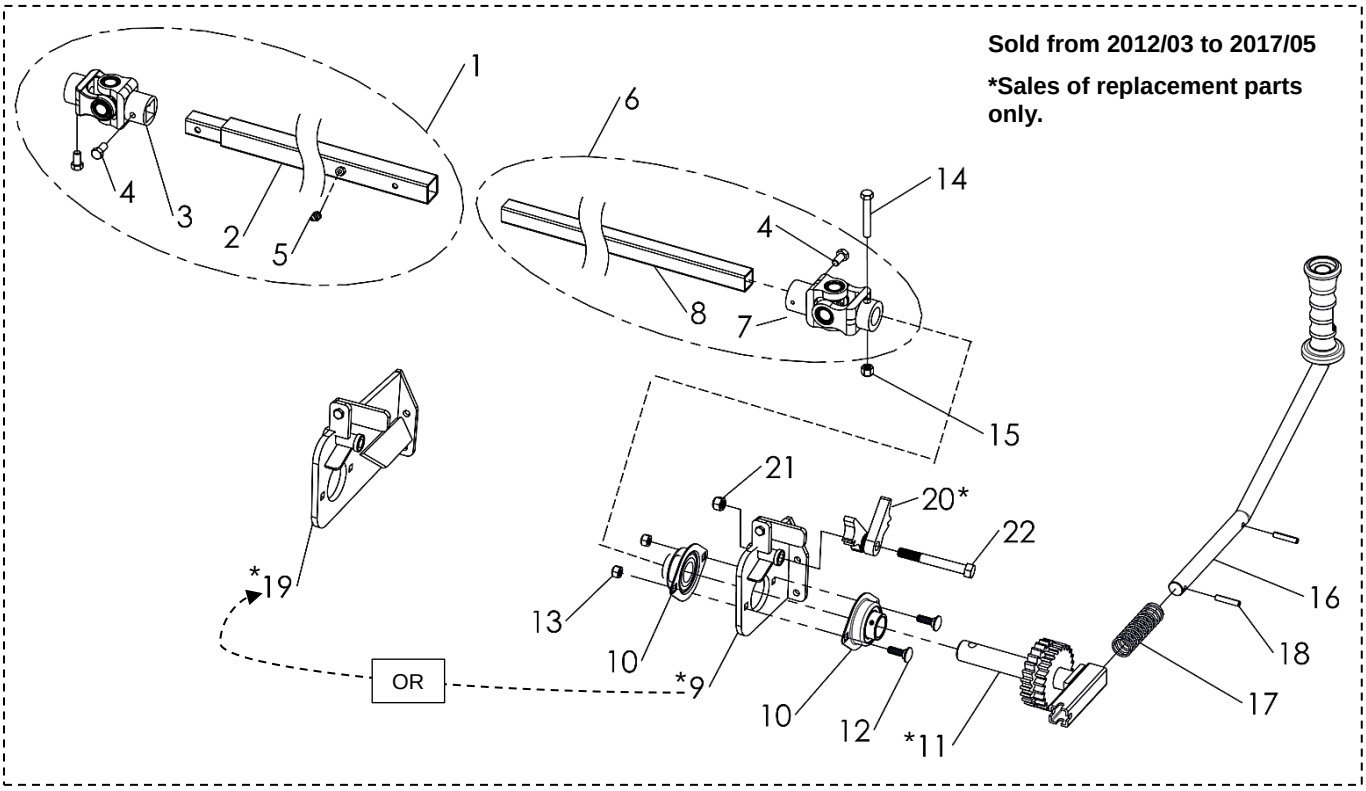

421A0003-C COMPLETE ASSEMBLED CRANK **DRIVER SIDE**
421A0003-P COMPLETE ASSEMBLED CRANK **PASSENGER SIDE**

Item	# Part	Description	Qty
1	421A0006	EXTERIOR TELESCOPIC TUBE ASS'Y (INCLUDE PARTS 2, 3, 4 & 5)	1
2	421SA0003	EXTERIOR TELESCOPIC TUBE	1
3	151CA2059	U-JOINT 3/4'' ROUND TO 1"SQUARE	1
4	151-01PZ0051	3/8''-16 X 3/4"LG ZP HEX BOLT	3
5	151CA2045	GREASE FITTING NA6511	1
6	421A0009	INNER TELESCOPIC TUBE ASS'Y (INCLUDE PARTS 4, 7 & 8)	1
7	151CA2060	U-JOINT 1" ROUND TO 1 " SQUARE	1
8	421CM0003	INNER TELESCOPIC TUBE	1
*9	401SA0015-C	**SHORT** SUPPORT BASE **DRIVER SIDE**	1
	401SA0015-P	**SHORT** SUPPORT BASE **PASSENGER SIDE**	
10	151CA2072	1'' SHEET METAL FLANGE BEARING	2
*11	401SA0010	DOUBLES GEAR AND SHAFT ASS'Y	1
12	151-09QCBC5161	5/16''-18 X 1''LG S/S CARRIAGE BOLT	2
13	151-05QC0005	5/16''-18 S/S LOCKNUT	2
14	151-01PZ0058	3/8''-16 X 2,5"LG ZINC HEX BOLT	1
15	151-05PZ0006	3/8''-16 ZP LOCKNUT	1
16	401SA0008	MULTI GEAR HANDLE ONLY	1
17	151CA1033	3,5" SPRING FOR MULTI GEARS HANDLE	1
18	151-09QCSP14114	SPRING PIN 1/4'' X 1.25''LG	2
*19	401SA0005-C	**LONG** SUPPORT PLATE **DRIVER SIDE**	or
	401SA0005-P	**LONG** SUPPORT PLATE **PASSENGER SIDE**	
*20	401SA0006	DOUBLE LATCH ASSEMBLY	1
21	151-05QC0007	7/16''-14 S/S LOCKNUT	1
22	151-01QC0086G8	7/16''-14 X 3,5" S/S HEX BOLT	1

Assembled crank GEN 2

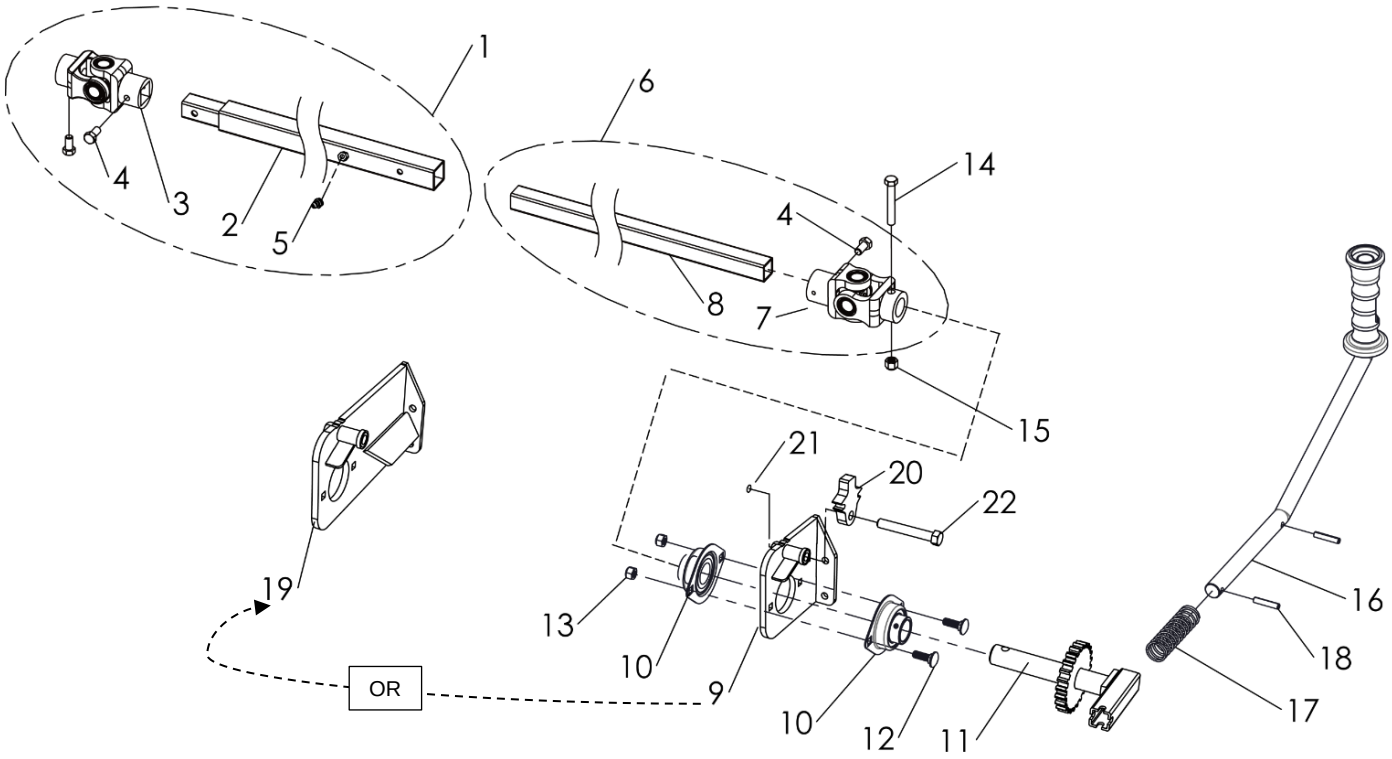

421A0003-C COMPLETE ASSEMBLED CRANK **DRIVER SIDE**
421A0003-P COMPLETE ASSEMBLED CRANK **PASSENGER SIDE**

Item	# Part	Description	Qty
1	421A0006	EXTERIOR TELESCOPIC TUBE ASS'Y (INCLUDE PARTS 2, 3, 4 & 5)	1
2	421SA0003	EXTERIOR TELESCOPIC TUBE	1
3	151CA2059	U-JOINT 3/4'' ROUND TO 1"SQUARE	1
4	151-01PZ0051	3/8''-16 X 3/4"LG ZP HEX BOLT	3
5	151CA2045	GREASE FITTING NA6511	1
6	421A0009	INNER TELESCOPIC TUBE ASS'Y (INCLUDE PARTS 4, 7 & 8)	1
7	151CA2060	U-JOINT 1" ROUND TO 1 " SQUARE	1
8	421CM0003	INNER TELESCOPIC TUBE	1
9	401SA0015-C-R1	**SHORT** SUPPORT BASE REV1 **DRIVER SIDE**	1
	401SA0015-P-R1	**SHORT** SUPPORT BASE REV1 **PASSENGER SIDE**	
10	151CA2072	1'' SHEET METAL FLANGE BEARING	2
11	401SA0010-R2	SINGLE GEARS AND SHAFT ASS'Y	1
12	151-09QCBC5161	5/16''-18 X 1''LG S/S CARRIAGE BOLT	2
13	151-05QC0005	5/16''-18 S/S LOCKNUT	2
14	151-01PZ0058	3/8''-16 X 2,5"LG ZINC HEX BOLT	1
15	151-05PZ0006	3/8''-16 ZP LOCKNUT	1
16	401SA0008	MULTI GEAR HANDLE ONLY	1
17	151CA1033	3,5" SPRING FOR MULTI GEARS HANDLE	1
18	151-09QCSP14114	SPRING PIN 1/4'' X 1.25''LG	2
19	401SA0005-C-R1	**LONG** SUPPORT PLATE REV 1 **DRIVER SIDE**	or
	401SA0005-P-R1	**LONG** SUPPORT PLATE REV 1 **PASSENGER SIDE**	
20	101CM5016-R1	SINGLE LATCH	1
21	151-05QC0007	7/16''-14 S/S LOCKNUT	1
22	151-01QC0084	7/16''-14 X 3" S/S HEX BOLT	1

Superior Telescopic Tube GEN 1

Sold 2012/03 to 2017/05

***Sales of replacement parts only.**

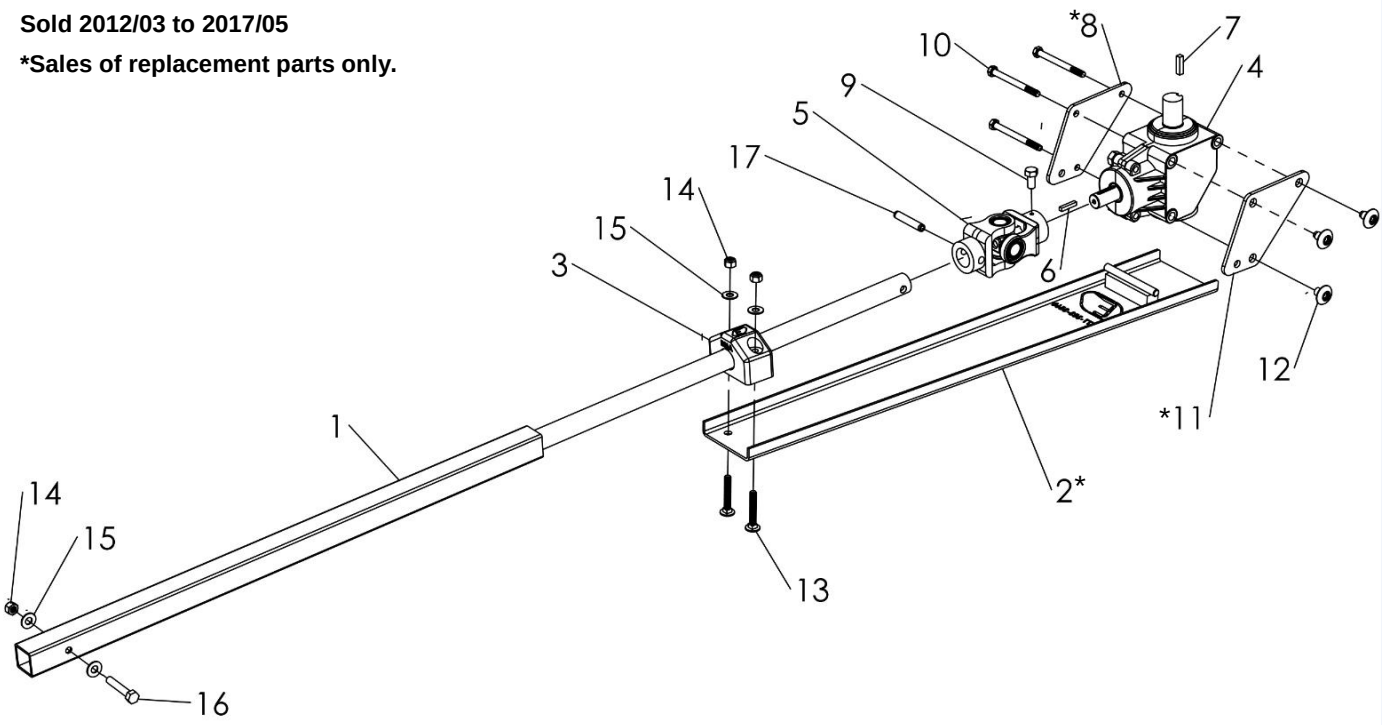

421A0008 EXTERIOR SUPERIOR TELESCOPIC TUBE ASS'Y

Item	# Part	Description	Qty
1	421SA0001	EXTERIOR TELESCOPIC TUBE	1
*2	401SA0002	UPPER PROTECTOR PLATE	1
3	141CABMA	MULTI GEAR SHAFT GUIDE	1
4	151CA1011	L150A 1,9:1 (3/4" X 1") GEAR BOX	1
5	151CA2058	U-JOINT 3/4'' ROUND TO 1" ROUND	1
6	101CM1057-1	3/16'' SQUARE KEY 1''LG	1
7	101CM1058	1/4'' SQUARE KEY 1'' LG	1
*8	101CM5004	GEARBOX SUPPORT PLATE LH	1
9	151-01PZ0051	3/8''-16 X 3/4"LG ZP HEX BOLT	1
10	151-01PZ0038	5/16''-18 X 3,5"LG ZP HEX BOLT	2
*11	101CM5003	GEARBOX SUPPORT PLATE RH (T-NUT SIDE)	1
12	151-09QC516121	5/16''-18 ZP T-NUT	3
13	151-09QCBC5162	5/16-18'' X 2''LG S/S CARRIAGE BOLT	2
14	151-05QC0005	5/16''-18 S/S LOCKNUT	3
15	151-02QC0005	5/16'' STD S/S WASHER	4
16	151-01QC0031	5/16''-18 X 1,75"LG S/S HEX BOLT	1
17	151-09QCSP382	SPRING PIN 3/8" X 2"LG	1

Superior Telescopic Tube GEN 2

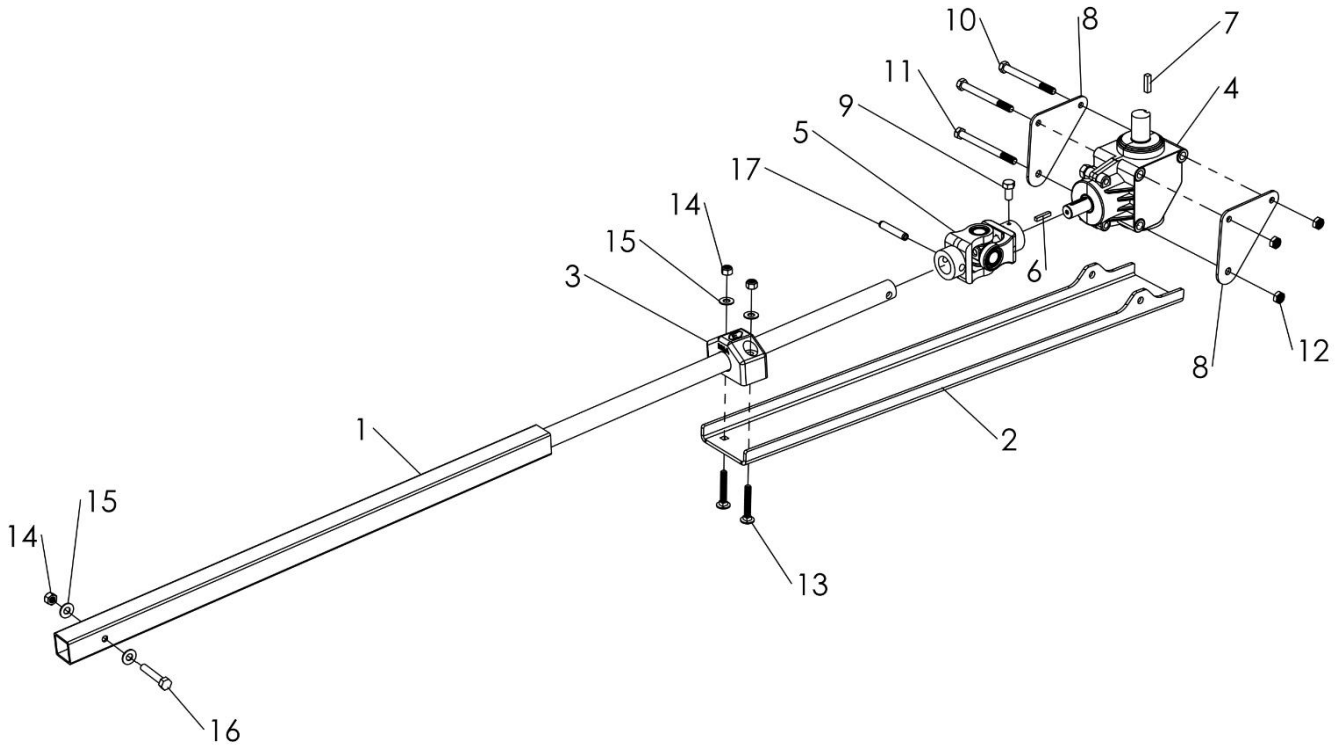

421A0008 EXTERIOR SUPERIOR TELESCOPIC TUBE ASS'Y

Item	# Part	Description	Qty
1	421SA0001	EXTERIOR TELESCOPIC TUBE	1
2	401CM5001-R7	UPPER PROTECTOR PLATE	1
3	141CABMA	MULTI GEAR SHAFT GUIDE	1
4	151CA1011	L150A 1,9:1 (3/4" X 1") GEAR BOX	1
5	151CA2058	U-JOINT 3/4'' ROUND TO 1" ROUND	1
6	101CM1057-1	3/16'' SQUARE KEY 1''LG	1
7	101CM1058	1/4'' SQUARE KEY 1'' LG	1
8	101CM5003-R3	GEARBOX SUPPORT PLATE LH	1
9	151-01PZ0051	3/8''-16 X 3/4"LG ZP HEX BOLT	1
10	151-01PZ0040	5/16''-18 X 4"LG ZP HEX BOLT	2
11	151-09QCSB384	SHOULDER BOLT 3/8" X 4"LG	1
12	151-05PZ0005	5/16''-18 S/S LOCKNUT	3
13	151-09QCBC5162	5/16-18'' X 2''LG S/S CARRIAGE BOLT	2
14	151-05QC0005	5/16''-18 S/S LOCKNUT	3
15	151-02QC0005	5/16'' STD S/S WASHER	4
16	151-01QC0031	5/16''-18 X 1,75"LG S/S HEX BOLT	1
17	151-09QCSP382	SPRING PIN 3/8" X 2"LG	1

Interior Telescopic Tube

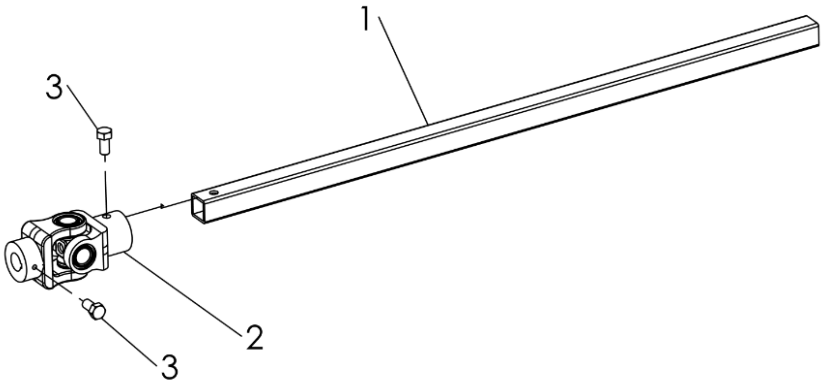

421A0004 INTERIOR SUPERIOR TELESCOPIC TUBE ASS'Y

Item	# Part	Description	Qty
1	421CM0003-C	**SHORT** TELESCOPIC TUBE	1
	421CM0003-L	**LONG** TELESCOPIC TUBE	or
2	151CA2059	U-JOINT 3/4'' ROUND TO 1"SQUARE	1
3	151-01PZ0051	3/8''-16 X 3/4" ZP HEX BOLT	2

Internal Tensioner B2

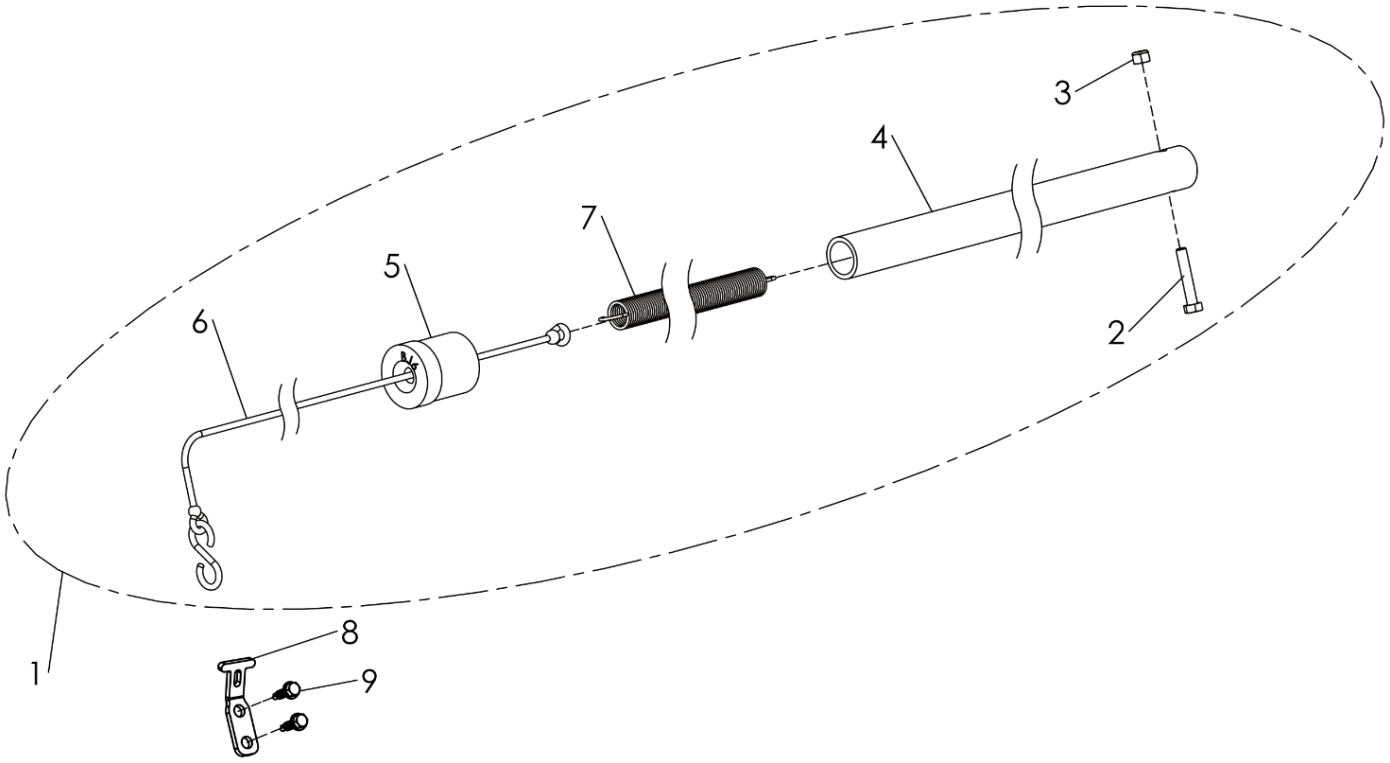

101A1002-BJ2 INTERNAL TENSIONER BJ2

Item	# Part	Description	Qty
1	101A1002-BJ2	INTERNAL TENSIONER BJ2 (INCLUDE PARTS 2 to 7)	
2	151-01PZ0031	5/16-18 X 1,75"LG ZP HEX BOLT	1
3	151-05PZ0005	5/16"-18 S/S LOCKNUT	1
4	151CA1003	1'' PVC TUBE	15'
5	141CABJ2	INTERNAL TENSIONER HEAD BJ2	1
6	101A1040	RED CORD 12'LG WITH HOOK	1
7	101CA1004	INTERNAL TENSIONER SPRING 46''LG	1
8	101CM1055	TENSIONER & BUNGIES HOOK HOLDER	1
9	151-07PZ0006	SELFT-DRILLING SCREWS 1/4 X 1''LG ZP	2

External tensioner 60’’

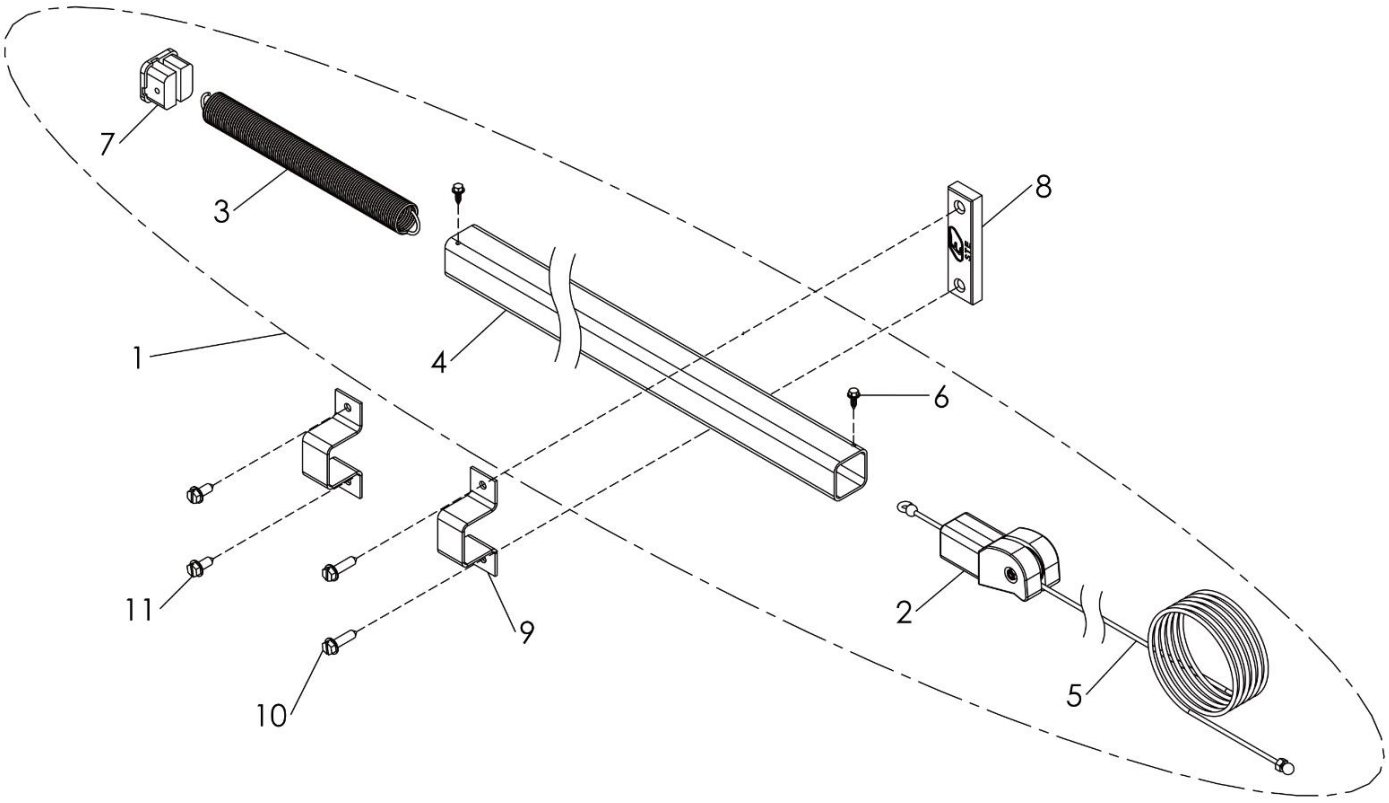

101A1008 60" EXTERNAL TENSIONER SINGLE HEAD WITH BRACKET

Item	# Part	Description	Qty
1	101A1004	60'' EXTERNAL TENSIONER SINGLE HEAD (INCLUDE PARTS 2 to 7)	
2	101A1016	SINGLE HEAD TENSIONER PULLEY ASS'Y	1
3	151CA1006	60''LG EXTERNAL TENSIONER SPRING	1
4	101CM1023	60'' ALUMINUM TUBE	1
5	101A1040N	RED CORD 12'LG WITH NUT	1
6	151-08PZ1434	HEX WASHER SMS 1/4 X 3/4	2
7	141ATA2	TA2 TENSIONER EXTREMITY ASS'Y	1
8	141CASTE	EXTERNAL TENSIONER SPACER	1
9	101CM1025	EXTERNAL TENSIONER HOLDER	2
10	151-08PZ38112	SMS 3/8" X 1,5"LG ZP	2
11	151-08PZ0033	SMS 3/8" X 1"LG DT2000	2

Appendix

Drilling template

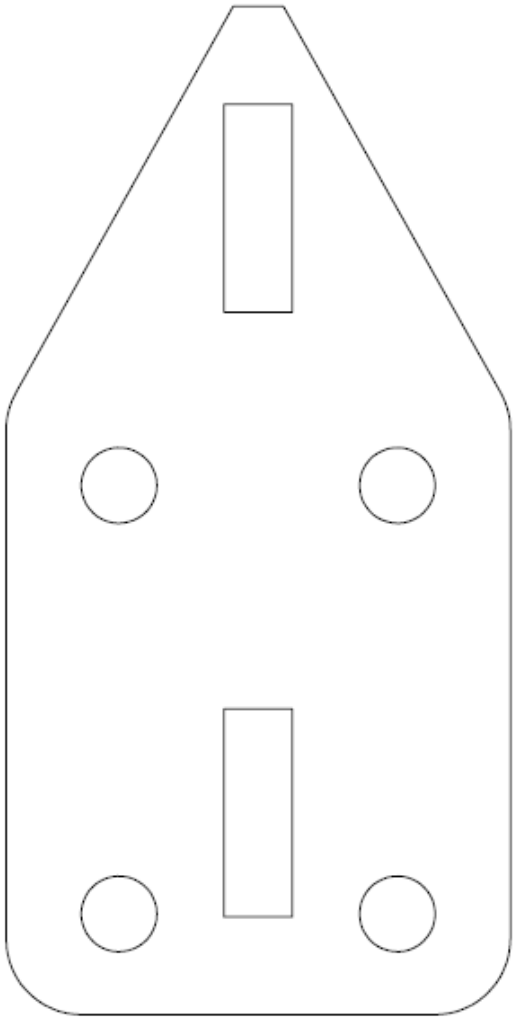

USE THIS TEMPLATE TO POSITION THE DRILL HOLES

Scale 1 :1

CARGO TARPS®

PROFESSIONAL GRADE TARP SYSTEMS

N/F : FIF01EN-R3
Updated : October 2017

FINAL INSPECTION FORM

Distributor :_____ Client :_____ Date :_____

Trailer (**NIV**) :_____ Mechanism SN# :_____ Motor SN# :_____
(SN # are indicated on the white labels applied on the mechanism and motor.)

Mechanism Type

421 ☐ 521 ☐ 201 ☐ 301 ☐ 591 ☐ 515 ☐ Autre :_____

	1. OPEN the tarp and verify :	**Reference step**	
1.1.	Position and quantity of **blocks**. If shims were installed, are they adequate?	5	☐
1.2.	The presence of the **guiding bolts** used to support the cords of the **tensioners** (front and rear).	2a, 4, 8	☐
1.3.	If **protective** parts must be installed under the cords of the **tensioners** (front and rear).	6c, 8	☐
1.4.	That the **small rear tarp** is well centered and well anchored on the trailer.	4	☐
1.5.	That the cross-bows are well centered under the tarp **reinforcements**.	6b	☐
1.6.	That all **logos/stickers/decals** are installed and well positioned (logos and cross-bow identification)	9d	☐
1.7.	That the trailer does not have any sharp parts, components or edges that could damage the tarp.	5	☐
1.8.	The quality of the **welds** of the pivots and cross-bow union joints.	3, 9b	☐

	2. During the CLOSING or OPENING verify :	**Reference step**	
2.1.	That the cords of the **tensioners** are well aligned with the guiding bolts (front and rear).	4, 8	☐
2.2.	That the rolling pipe **ring** is well aligned with the front face of the front cap.	6b	☐
2.3.	That the **tarp hangs nicely** on the side of the trailer before anchoring into the blocks.	-	☐

	3. When the tarp is CLOSED verify :	**Reference step**	
3.1.	That the rolling pipe is **firmly anchored** to the blocks.	-	☐
3.2.	That the tarp **does not sag** between the cross-bows.	9b	☐
3.3.	That the **belts/reinforcements** welded at the front and rear are well stretched.	2b, 3d	☐
3.4.	That there is **no spike or sharp edge** pushing on the tarp that risk piercing and damaging it.	5	☐
3.5.	That the tarp is well stretched and anchored on the **central pipe**.	9b	☐

	4. According to the type of mechanism or the options – verify :	**Reference step**	
4.1.	That the **crank** is adjusted in the correct position (301, 421).	9c	☐
4.2.	The presence of the **safety/back-up drill** (521).	-	☐
4.3.	That all **electric wires** are correctly installed under the trailer (515, 521, 591).	-	☐
4.4.	That the **grain chute** is installed firmly.	-	☐

	5. General :	**Reference step**	
5.1.	Is the trailer clean (drill chips, grease, dust, etc.)?	-	☐
5.2.	Has the technical documentation been provided to the client?	-	☐

Comments :_____

_____

Inspected by :_____ Signature :_____
(Please print)

Nom du client :_____ Signature :_____
(Please print)

PLEASE RETURN THIS FORM BY EMAIL AT : info@elcargo.com
OR BY FAX AT : (450) 253-3561 TO ACTIVATE THE WARRANTY.